Nidec
All for dreams

Ihr Ansprechpartner
+49 (0) 6181 9704 - 0
EPA GmbH • Fliederstraße 8 • 63486 Bruchköbel
www.epa.de

Parameter Reference Guide

Unidrive M400

RFC-A Mode

Issue: 01.05.02.02

About Parameter Reference Guide

The manufacturer accepts no liability for any consequences resulting from inappropriate, negligent or incorrect installation or adjustment of the optional operating parameters of the equipment or from mismatching the variable speed drive with the motor.

The contents of this guide are believed to be correct at the time of printing. In the interests of a commitment to a policy of continuous development and improvement, the manufacturer reserves the right to change the specification of the product or its performance, or the contents of the guide, without notice.

All rights reserved. No parts of this guide may be reproduced or transmitted in any form or by any means, electrical or mechanical including photocopying, recording or by an information storage or retrieval system, without permission in writing from the publisher.

Copyright	© August 2017 Control Techniques Ltd
Issue Number:	01.05.02.02
Unidrive M400 Firmware Version:	V01.05.02.02
Unidrive M400 Project Last Modified:	04-Aug-2017 14:37:52
HTML Generator Version:	3.4.2.24481

Parameter mm.000

Parameter mm.000 (mm.000) is one parameter that can be accessed from every drive menu so that the user can initiate various actions by setting a value in this parameter and then performing a drive reset. If the action is completed successfully parameter mm.000 is cleared when the action is complete. If the action is not started because the value does not correspond to an action, or because the action is not allowed (i.e. an attempt is made to load defaults and the drive is enabled), parameter mm.000 is not cleared. If the action is started and then fails a trip is produced and parameter mm.000 is not cleared.

There could be some conflict between the actions of *Parameter mm.000* (mm.000) and *Parameter Cloning* (11.042) when the drive is reset. If *Parameter Cloning* (11.042) has a value of 1 or 2 and a valid action is required from the value of parameter mm.000 then only the action required by parameter mm.000 is performed, but on successful completion of the action both parameters are cleared. If *Parameter Cloning* (11.042) has any other value it is not affected.

The table below shows the possible actions that can be initiated with *Parameter mm.000* (mm.000).

***Parameter mm.000* (mm.000) value**	**Action**	**Possible failures**
1000	Save drive user save parameters to non-volatile memory. Power-down save parameters are saved when the drive enters the under voltage state.	No action if the drive is in the under voltage state
1001	Save drive parameters to non-volatile memory. It should be noted that power-down save parameters are also saved which will result in one background task scan being extended to 200ms.	
1070	Reset all option modules	
1233	Load 50Hz defaults	No action if the drive is enabled
1234	Load 50Hz defaults to all menus except option module menus (i.e 15 to 20 and 24 to 28)	No action if the drive is enabled
1244	Load 60Hz defaults	No action if the drive is enabled
1245	Load 60Hz defaults to all menus except option module menus (i.e 15 to 20 and 24 to 28)	No action if the drive is enabled
1299	Reset *Stored HF* trip.	
2001	Create a boot file on a non-volatile media card based on the present drive parameters including all Menu 20 parameters	Non-volatile media card trips
4xxx	NV media card: Transfer the drive parameters to parameter file xxx	Non-volatile media card trips
5xxx	NV media card: Transfer the onboard user program to onboard user program file xxx	Non-volatile media card trips
6xxx	NV media card: Load the drive parameters from parameter file xxx or the onboard user program from onboard user program file xxx	No action if the drive is enabled Non-volatile media card trips
7xxx	NV media card: Erase file xxx	Non-volatile media card trips
8xxx	NV Media card: Compare the data in the drive with file xxx	Non-volatile media card trips
9555	NV media card: Clear the warning suppression flag	Non-volatile media card trips
9666	NV media card: Set the warning suppression flag	Non-volatile media card trips
9777	NV media card: Clear the read-only flag	Non-volatile media card trips
9888	NV media card: Set the read-only flag	Non-volatile media card trips
12000	Only display parameters that are different from their default value. This action does not require a drive reset.	
12001	Only display parameters that are used to set-up destinations (i.e. DE format bit is 1). This action does not require a drive reset.	
59999	Deletes an onboard user program if a program is present. Note: Any parameter changes that have not been saved will be lost during this action.	No action if the drive is enabled. No action if there is no program present. No action if the user program is enabled (i.e. *Onboard User Program: Enable* (11.047) = 1)

Parameter mm.000 (mm.000) values from 1 to 14 are equivalent to other values as shown in the table below to allow easy access to some commonly used functions. For 0 and each of these values the keypad provides a string as shown.

Value	String	Equivalent value	Action
0	[No Action]	0	
1	[Save parameters]	1001	Save drive parameters to non-volatile memory
2	[Load file 1]	6001	Load the data from file 1 on a non-volatile media card into the drive provided it is a parameter file
3	[Save to file 1]	4001	Store the drive parameters in file 1 on a non-volatile media card
4	[Load file 2]	6002	Load the data from file 2 on a non-volatile media card into the drive provided it is a parameter file
5	[Save to file 2]	4002	Store the drive parameters in file 2 on a non-volatile media card
6	[Load file 3]	6003	Load the data from file 3 on a non-volatile media card into the drive provided it is a parameter file
7	[Save to file 3]	4003	Store the drive parameters in file 3 on a non-volatile media card
8	[Show non-default]	12000	Only display parameters that are different from their default value
9	[Destinations]	12001	Only display parameters that are used to set-up destinations
10	[Reset 50Hz defs]	1233	Load 50Hz defaults
11	[Reset 60Hz defs]	1244	Load 60Hz defaults
12	[Reset modules]	1070	Reset all option modules

Saving drive parameters
User-save and power-down save drive parameters are stored in non-volatile memory within the drive. Any values that have changed are copied to this memory under the following conditions.

Parameter type	Conditions for copy to non-volatile memory
User-save parameter not visible in menu 0	Drive reset with 1000 in *Parameter mm.000* (mm.000) if the drive is not in the under voltage state. OR A drive reset with 1001 in *Parameter mm.000* (mm.000). OR After parameters are transferred from a non-volatile media card. OR After the drive mode is changed. OR After default parameters are loaded. OR After parameters are transferred from an electronic nameplate.
User save parameter visible in menu 0	Under the conditions given above for user save parameters not visible in Menu 0. OR If the keypad is in edit mode for a user-save parameter in Menu 0, the parameter is saved when the keypad mode is changed from edit mode.
Power-down save parameter	A drive reset with 1001 in *Parameter mm.000* (mm.000). OR On the transition into the under voltage state. OR After the drive mode is changed. OR After parameters are transferred from a non-volatile media card which results in the drive mode changing.

It can take some time for parameter data to be copied to non-volatile memory, especially if there are a large number of differences between the parameter values in the drive and the values stored in the memory. Saving Power-down save parameters takes a maximum of 300ms, but saving user-save parameters can take several seconds. If the drive is powered from a 24V control supply, or from a low voltage supply, the power down time of the control system can be very short and there is a risk that either the stored values of the power-down save or user-save parameters could be corrupted. This would result in an *EEPROM Fail* trip at the next power-up. To reduce this risk, the power-down save and user-save parameters are each stored in two banks. The banks are alternated each time a save is performed and the bank pointer is only updated once the save is complete. If the new bank is corrupted a *User Save* or *Power Down Save* is initiated at the next power-up indicating an error in the user-save or power-down save data respectively, and the data from the old bank is used. The following points should be noted:

1. If a *User Save* or *Power Down Save* trip occurs at power-up then parameter changes made before power down will be lost. To clear these trips a parameter save must be performed. If both the user-save and power-down save data is corrupted then a *Power Down Save* trip is produced.
2. When a Menu 0 parameter is changed its value is saved immediately to the active bank and the bank pointer is not changed. Therefore changes made via Menu 0 are not lost if a *User Save* trip occurs at power-up.
3. When the drive mode changes all the data in both banks in the non-volatile memory is cleared and the default parameters are saved in both banks. Therefore there is an extended parameter saving period immediately after a drive mode change.

4. Two banks are not provided in non-volatile media cards therefore the card could be corrupted if the power is removed when the drive is writing data to the card.

Loading defaults
A drive reset with 1233 in *Parameter mm.000* (mm.000) loads the defaults defined for each parameter. If defaults are loaded with 1244 in *Parameter mm.000* (mm.000) then the parameters in the table below have different defaults that are intended for the 60Hz regions.

Parameter	Default	Drive modes	Drive voltage rating
Maximum reference clamp (01.006)	60.00Hz	All	All
Standard Ramp Voltage (02.008)	775V	All	400V
Motor Rated Frequency (05.006)	60.00Hz	All	All
Motor Rated Load rpm (05.008)	1800rpm	All	All
Motor *Rated Voltage* (05.009)	460V	All	400V
M2 Maximum Reference Clamp (21.001)	60.00Hz	All	All
M2 Motor Rated Frequency (21.006)	60.00Hz	All	All
M2 Motor Rated Load rpm (21.008)	1800rpm	All	All
M2 Motor Rated Voltage (21.009)	460V	All	All

Non-volatile media card data transfer
Details of the data that can be stored on a non-volatile media card and the methods to transfer/access this data are given in Menu 11.

Current Ratings

The tables below give the maximum output current ratings, peak current ratings and power ratings for all drive sizes and voltage ratings.

110V Rated Drives

Model	Heavy Duty					Normal Duty				Kc
	Rated Current	Motor Shaft Power		Peak Current Open Loop	Peak Current RFC	Rated Current	Motor Shaft Power		Peak Current	
	A	kW	hp	A	A	A	kW	hp	A	A
01100017	1.7	0.25	0.33	2.55	3.1	1.7				3.74
01100024	2.4	0.37	0.5	3.6	4.3	2.4				5.28
02100042	4.2	0.75	1	6.3	7.6	4.2				9.24
02100056	5.6	1.1	1.5	8.4	10.1	5.6				12.32

200V Rated Drives

Model	Heavy Duty					Normal Duty				Kc
	Rated Current	Motor Shaft Power		Peak Current Open Loop	Peak Current RFC	Rated Current	Motor Shaft Power		Peak Current	
	A	kW	hp	A	A	A	kW	hp	A	A
01200017	1.7	0.25	0.33	2.55	3.1	1.7				3.74
01200024	2.4	0.37	0.5	3.6	4.3	2.4				5.28
01200033	3.3	0.55	0.75	4.8	5.9	3.3				7.26
01200042	4.2	0.75	1	6.3	7.6	4.2				9.24
02200024	2.4	0.37	0.5	3.6	4.3	2.4				5.28
02200033	3.3	0.55	0.75	4.8	5.9	3.3				7.26
02200042	4.2	0.75	1	6.3	7.6	4.2				9.24
02200056	5.6	1.1	1.5	8.4	10.1	5.6				12.32
02200075	7.5	1.5	2	11.25	13.5	7.5				16.5
03200100	10	2.2	3	15	18	10				22
04200133	13.3	3	3	19.95	23.9	13.3				29.26
04200176	17.6	4	5	26.4	31.7	17.6				38.72
05200250	25	5.5	7.5	37.5	50	30	7.5	10	33	55.556
06200330	33	7.5	10	49.5	66	50	11	15	55	73.333
06200440	44	11	15	66	88	58	15	20	63.8	97.778
07200610	61	15	20	91.5	122	75	18.5	25	82.5	135.556
07200750	75	18.5	25	112.5	150	94	22	30	103.4	166.667
07200830	83	22	30	124.5	166	117	30	40	128.7	184.444
08201160	116	30	40	174	232	149	37	50	163.9	257.778
08201320	132	37	50	198	264	180	45	60	198	293.333
09201760	176	45	60	264	308	216	55	75	237.6	342.222
09202190	219	55	75	328.5	383.25	266	75	100	292.6	425.833

400V Rated Drives

Model	Heavy Duty					Normal Duty				Kc
	Rated Current	Motor Shaft Power		Peak Current Open Loop	Peak Current RFC	Rated Current	Motor Shaft Power		Peak Current	
	A	kW	hp	A	A	A	kW	hp	A	A
02400013	1.3	0.37	0.5	1.95	2.3	1.3				2.86
02400018	1.8	0.55	0.75	2.7	3.2	1.8				3.96
02400023	2.3	0.75	1	3.45	4.1	2.3				5.06
02400032	3.2	1.1	1.5	4.8	5.8	3.2				7.04
02400041	4.1	1.5	2	6.15	7.4	4.1				9.02
03400056	5.6	2.2	3	8.4	10.1	5.6				12.32
03400073	7.3	3	3	10.95	13.1	7.3				16.06
03400094	9.4	4	5	14.1	16.9	9.4				20.68
04400135	13.5	5.5	7.5	20.25	24.3	13.5				29.7
04400170	17	7.5	10	25.5	30.6	17				37.4
05400270	27	11	20	40.5	54	30	15	20	33	60
05400300	30	15	20	45	60	31	15	20	34.1	66.667
06400350	35	15	25	52.5	70	38	18.5	25	41.8	77.778
06400420	42	18.5	30	63	84	48	22	30	52.8	93.333
06400470	47	22	30	70.5	94	63	30	40	69.3	104.444
07400660	66	30	50	99	132	79	37	50	86.9	146.667
07400770	77	37	60	115.5	154	94	45	60	103.4	171.111
07401000	100	45	75	150	200	112	55	75	123.2	222.222
08401340	134	55	100	201	268	155	75	100	170.5	297.778
08401570	157	75	125	235.5	314	184	90	125	202.4	348.889
09402000	200	90	150	300	350	221	110	150	243.1	388.889
09402240	224	110	150	336	392	266	132	200	292.6	435.556

575V Rated Drives

Model	Heavy Duty					Normal Duty				Kc
	Rated Current	Motor Shaft Power		Peak Current Open Loop	Peak Current RFC	Rated Current	Motor Shaft Power		Peak Current	
	A	kW	hp	A	A	A	kW	hp	A	A
05500030	3	1.5	2	4.5	6	3.9	2.2	3	4.29	6.667
05500040	4	2.2	3	6	8	6.1	4	5	6.71	8.889
05500069	6.9	4	5	10.35	13.8	10	5.5	7.5	11	15.333
06500100	10	5.5	7.5	15	20	12	7.5	10	13.2	22.222
06500150	15	7.5	10	22.5	30	17	11	15	18.7	33.333
06500190	19	11	15	28.5	38	22	15	20	24.2	42.222
06500230	23	15	20	34.5	46	27	18.5	25	29.7	51.111
06500290	29	18.5	25	43.5	58	34	22	30	37.4	64.444
06500350	35	22	30	52.5	70	43	30	40	47.3	77.778
07500440	44	30	40	66	88	53	45	50	58.3	97.778
07500550	55	37	50	82.5	110	73	55	60	80.3	122.222
08500630	63	45	60	94.5	126	86	75	75	94.6	140
08500860	86	55	75	129	172	108	90	100	118.8	191.111
09501040	104	75	100	156	182	125	110	125	137.5	202.222
09501310	131	90	125	196.5	229.25	150	110	150	165	254.722

690V Rated Drives

Model	Heavy Duty					Normal Duty				Kc
	Rated Current	Motor Shaft Power		Peak Current Open Loop	Peak Current RFC	Rated Current	Motor Shaft Power		Peak Current	
	A	kW	hp	A	A	A	kW	hp	A	A
07600190	19	15	20	28.5	38	23	18.5	25	25.3	42.222
07600240	24	18.5	25	36	48	30	22	30	33	53.333
07600290	29	22	30	43.5	58	36	30	40	39.6	64.444
07600380	38	30	40	57	76	46	37	50	50.6	84.444
07600440	44	37	50	66	88	52	45	60	57.2	97.778
07600540	54	45	60	81	108	73	55	75	80.3	120
08600630	63	55	75	94.5	126	86	75	100	94.6	140
08600860	86	75	100	129	172	108	90	125	118.8	191.111
09601040	104	90	125	156	182	125	110	150	137.5	202.222
09601310	131	110	150	196.5	229.25	155	132	175	170.5	254.722

Variable Minimum / Maximum Pairs

The descriptions below define the variable minimum/maximum pairs that can be used with parameters when the VM format bit is set. The variable minimum and maximum themselves can be dependent on other parameters, or the drive rating or other conditions as defined. The variable minimum and the variable maximum have a limited range and this is defined for each minimum/maximum pair.

Identifier	VM_AC_VOLTAGE
Description	Range applied to parameters showing a.c. voltage
Units	V
Range of [MIN]	0
Range of [MAX]	0 to 930

VM_AC_VOLTAGE[MAX] in drive voltage rating dependent. See the table below.

Voltage level	200V	400V	575V (1)	690V (2)
VM_AC_VOLTAGE[MAX]	325	650	780	930

(1) Unidrive M frame size 5 and above only

(2) Unidrive M frame size 7 and above only

VM_AC_VOLTAGE[MIN] = 0

Identifier	VM_AC_VOLTAGE_SET
Description	Range applied to a.c. voltage set-up parameters
Units	V
Range of [MIN]	0
Range of [MAX]	0 to 765

VM_AC_VOLTAGE_SET[MAX] is drive voltage rating dependent. See the table below.

Voltage level	200V	400V	575V	690V
VM_AC_VOLTAGE_SET[MAX] frame size 1 to 4	240	480	N/A	N/A
VM_AC_VOLTAGE_SET[MAX] frame size 5 to 6	265	530	635	N/A
VM_AC_VOLTAGE_SET[MAX] frame size 7 to 9	265	530	635	765
VM_AC_VOLTAGE_SET[MAX] Commander ID	240	480	N/A	N/A

VM_AC_VOLTAGE_SET[MIN] = 0

Identifier	VM_ACCEL_RATE
Description	Maximum applied to the ramp rate parameters
Units	s/100Hz, s/MaxFrequency
Range of [MIN]	0.0
Range of [MAX]	0.0 to 32000.0

A maximum needs to be applied to the ramp rate parameters because the units are a time for a change of speed from zero to a defined level or to maximum speed. If the change of speed is to the maximum speed then changing the maximum speed changes the actual ramp rate for a given ramp rate parameter value. The variable maximum calculation ensures that longest ramp rate (parameter at its maximum value) is not slower than the rate with the defined level, i.e. 32000.0 s/100Hz.
The maximum frequency is taken from *Maximum Reference Clamp* (01.006) if *Select Motor 2 Parameters* (11.045) = 0, or *M2 Maximum Reference Clamp* (21.001) if *Select Motor 2 Parameters* (11.045) = 1.

VM_ACCEL_RATE[MIN] = 0.0

If *Ramp Rate Units* (02.039) = 0:
VM_ACCEL_RATE[MAX] = 32000.0
Otherwise:
VM_ACCEL_RATE[MAX] = 32000.0 x Maximum frequency / 100.00

Note - Parameter 11.045 is not available on M100/M101 and so only the Motor 1 parameters are relevant.

Identifier	VM_DC_VOLTAGE
Description	Range applied to d.c. voltage parameters
Units	V
Range of [MIN]	0
Range of [MAX]	0 to 1190

VM_DC_VOLTAGE[MAX] is the full scale d.c. link voltage feedback for the drive. This level is drive voltage rating dependent. See the table below.

Voltage level	200V	400V	575V	690V
VM_DC_VOLTAGE[MAX] frame size 1 to 4	510	870	N/A	N/A
VM_DC_VOLTAGE[MAX] frame size 5 to 6	415	830	990	N/A
VM_DC_VOLTAGE[MAX] frame size 7 to 9	415	830	990	1190
VM_DC_VOLTAGE[MAX] Commander ID	415	900	N/A	N/A

VM_DC_VOLTAGE[MIN] = 0

Identifier	VM_DC_VOLTAGE_SET
Description	Range applied to d.c. voltage reference parameters
Units	V
Range of [MIN]	0
Range of [MAX]	0 to 1150

VM_DC_VOLTAGE_SET[MAX] is drive voltage rating dependent. All values are shown in the table below.

	Uni M	Uni M	Uni M	Uni M	Commander ID	Commander ID
Voltage level	**200V**	**400V**	**575V (1)**	**690V (2)**	**200V**	**400V**
VM_DC_VOLTAGE_SET[MAX]	400	800	955	1150	440V	990V

(1) Frame size 5 and above only

(2) Frame size 7 and above only

VM_DC_VOLTAGE_SET[MIN] = 0

Identifier	VM_DRIVE_CURRENT
Description	Range applied to parameters showing current in A
Units	A
Range of [MIN]	-9999.99 to 0.00
Range of [MAX]	0.00 to 9999.99

VM_DRIVE_CURRENT[MAX] is equivalent to the full scale (over current trip level) for the drive and is given by *Full Scale Current Kc* (11.061).

VM_DRIVE_CURRENT[MIN] = - VM_DRIVE_CURRENT[MAX]

Identifier	VM_FREQ
Description	Range applied to parameters showing frequency
Units	Hz
Range of [MIN]	-1100.00
Range of [MAX]	1100.00

This variable minimum/maximum defines the range of speed monitoring parameters. To allow headroom for overshoot the range is set to twice the range of the speed references.

VM_FREQ[MIN] = 2 x VM_SPEED_FREQ_REF[MIN]

VM_FREQ[MAX] = 2 x VM_SPEED_FREQ_REF[MAX]

Identifier	VM_MAX_SWITCHING_FREQUENCY
Description	Range applied to the maximum switching frequency parameters
Units	User units
Range of [MIN]	OpenLoop: 0 (0.667kHz), RFC-A: 2 (2kHz)
Range of [MAX]	8 (16kHz)

VM_SWITCHING_FREQUENCY[MAX] = Power stage dependent

VM_SWITCHING_FREQUENCY[MIN] = 0

Note that RFCA modes are not available on Unidrive M 100/101 and Commander ID drives and so these settings are not applicable on these drives.

Identifier	VM_MOTOR1_CURRENT_LIMIT
Description	Range applied to current limit parameters (motor 1)
Units	%
Range of [MIN]	0.0
Range of [MAX]	0.0 to 1000.0

VM_MOTOR1_CURRENT_LIMIT[MIN] = 0.0

VM_MOTOR1_CURRENT_LIMIT[MAX] = (ITlimit / ITrated) x 100 %

Where:

ITlimit = Imax x cos($\sin^{-1}$(IMrated / Imax))

IMrated = Pr **05.007** sin f

ITrated = Pr **05.007** x cos f

cos f= Pr **05.010**

Imax is (Overload x Pr **11.061** / 2.2) when the motor rated current set in Pr **05.007** is less than or equal to Pr **11.032** (i.e. Heavy duty), otherwise it is the lower of (Overload x Pr **11.061** / 2.2) or 1.1 x Pr **11.060** (i.e. Normal Duty).

Overload = 1.75 for Open Loop mode and 1.8 for RFCA mode (not available on M100.M101, ID300, or ID302).

Identifier	VM_MOTOR2_CURRENT_LIMIT
Description	Range applied to current limit parameters (motor 2)
Units	%
Range of [MIN]	0.0
Range of [MAX]	0.0 to 1000.0

VM_MOTOR2_CURRENT_LIMIT[MAX] is dependent on the drive rating and motor set-up parameters.

VM_MOTOR2_CURRENT_LIMIT[MIN] = 0.0

Refer to VM_MOTOR1_CURRENT_LIMIT for description.

Note - Parameter 11.045 is not available on M100/M101 and so this is not used on these drives.

Identifier	VM_NEGATIVE_REF_CLAMP1
Description	Limits applied to the negative frequency clamp (motor 1)
Units	Hz
Range of [MIN]	-550.00 to 0.00
Range of [MAX]	0.00 to 550.00

This variable maximum/minimum defines the range of the negative frequency clamp associated with motor map 1 (*Minimum Reference Clamp* (01.007)). The minimum and maximum are affected by the settings of the *Negative Reference Clamp Enable* (01.008), *Bipolar Reference Enable* (01.010) and *Maximum Reference Clamp* (01.006) as shown in the table below.

***Negative Reference Clamp Enable* (01.008)**	***Bipolar Reference Enable* (01.010)**	**VM_NEGATIVE_REF_CLAMP1[MIN]**	**VM_NEGATIVE_REF_CLAMP1[MAX]**
0	0	0.00	Pr 01.006
0	1	0.00	0.00
1	X	-VM_POSITIVE_REF_CLAMP[MAX]	0.00

Identifier	VM_NEGATIVE_REF_CLAMP2
Description	Limits applied to the negative frequency clamp (motor 2)
Units	Hz
Range of [MIN]	-550.00 to 0.00
Range of [MAX]	0.00 to 550.00

This variable maximum/minimum defines the range of the negative frequency clamp associated with motor map 2 (*M2 Minimum Reference Clamp* (21.002)). It is defined in the same way as VM_NEGATIVE_REF_CLAMP1 except that the *M2 Maximum Reference Clamp* (21.001) is used instead of *Maximum Reference Clamp* (01.006).

Note - Parameter 11.045 is not available on M100/M101 and so this is not used on these drives.

Identifier	VM_POSITIVE_REF_CLAMP
Description	Limits applied to the positive frequency reference clamp
Units	Hz
Range of [MIN]	0.00
Range of [MAX]	550.00

VM_POSITIVE_REF_CLAMP[MAX] defines the range of the positive reference clamps, *Maximum Reference Clamp* (01.006) and *M2 Maximum Reference Clamp* (21.001) , which in turn limits the references.

Note - Parameter 11.045 is not available on M100/M101 and so only the Motor 1 parameter is relevant.

This values are model dependent. See the table below.

Models	**Clamp level**
M100 - M400	550.00
Commander ID	150.00

Identifier	VM_POWER
Description	Range applied to parameters that either set or display power
Units	kW
Range of [MIN]	-9999.99 to 0.00
Range of [MAX]	0.00 to 9999.99

VM_POWER[MAX] is rating dependent and is chosen to allow for the maximum power that can be output by the drive with maximum a.c. output voltage, at maximum controlled current and unity power factor.

VM_POWER[MAX] = √3 x VM_AC_VOLTAGE[MAX] x VM_DRIVE_CURRENT[MAX] / 1000

VM_POWER[MIN] = -VM_POWER[MAX]

Identifier	VM_RATED_CURRENT
Description	Range applied to rated current parameters
Units	A
Range of [MIN]	0.00
Range of [MAX]	0.00 to 9999.99

VM_RATED_CURRENT [MAX] = *Maximum Rated Current* (11.060) and is dependent on the drive rating.

VM_RATED_CURRENT [MIN] = 0.00

Identifier	VM_SPEED_FREQ_REF
Description	Range applied to the frequency reference parameters
Units	Hz
Range of [MIN]	-550.00 to 0.00
Range of [MAX]	0.00 to 550.00

This variable minimum/maximum is applied throughout the frequency and speed reference system so that the references can vary in the range from the minimum to maximum clamps.

***Negative Reference Clamp Enable* (01.008)**	**VM_SPEED_FREQ_REF[MAX] if *Select Motor 2 Parameters* (11.045) = 0**	**VM_SPEED_FREQ_REF[MAX] if *Select Motor 2 Parameters* (11.045) = 1**
0	*Maximum Reference Clamp* (01.006)	*M2 Maximum Reference Clamp* (21.001)
1	*Maximum Reference Clamp* (01.006) or |*Minimum Reference Clamp* (01.007)| whichever the larger	*M2 Maximum Reference Clamp* (21.001) or |M2 *Minimum Reference Clamp* (21.002)| whichever the larger

VM_SPEED_FREQ_REF[MIN] = -VM_SPEED_FREQ_REF[MAX].

Note - Parameter 11.045 is not available on M100/M101 and so only the Motor 1 parameters are relevant.

Identifier	VM_SPEED_FREQ_REF_UNIPOLAR
Description	Unipolar version of VM_SPEED_FREQ_REF
Units	Hz
Range of [MIN]	0.00
Range of [MAX]	0.00 to 550.00

VM_SPEED_FREQ_REF_UNIPOLAR[MAX] = VM_SPEED_FREQ_REF[MAX]

VM_SPEED_FREQ_REF_UNIPOLAR[MIN] = 0.00

Identifier	VM_SPEED_FREQ_USER_REFS
Description	Range applied to analogue reference parameters
Units	Hz
Range of [MIN]	-550.00 to 550.00
Range of [MAX]	0.00 to 550.00

This variable maximum is applied to *Analogue Reference 1* (01.036), *Analogue Reference 2* (01.037) and *Keypad Reference* (01.017).

The maximum applied to these parameters is the same as other frequency reference parameters.

VM_SPEED_FREQ_USER_REFS [MAX] = VM_SPEED_FREQ_REF[MAX]

However the minimum is dependent on *Negative Reference Clamp Enable* (01.008) and *Bipolar Reference Enable* (01.010).

***Negative Reference Clamp Enable* (01.008)**	***Bipolar Reference Enable* (01.010)**	**VM_SPEED_FREQ_USER_REFS[MIN]**
0	0	If *Select Motor 2 Parameters* (11.045) = 0 *Minimum Reference Clamp* (01.007), otherwise *M2 Minimum Reference Clamp* (21.002)
0	1	-VM_SPEED_FREQ_REF[MAX]
1	0	0.00
1	1	-VM_SPEED_FREQ_REF[MAX]

Note - Parameter 11.045 is not available on M100/M101 and so only the Motor 1 parameters are relevant.

Identifier	VM_SUPPLY_LOSS_LEVEL
Description	Range applied to the supply loss threshold
Units	V
Range of [MIN]	0 to 1150
Range of [MAX]	0 to 1150

VM_SUPPLY_LOSS_LEVEL[MAX] = VM_DC_VOLTAGE_SET[MAX]

VM_SUPPLY_LOSS_LEVEL[MIN] is drive voltage rating dependent. See the table below.

Voltage level	**200V**	**400V**	**575V (1)**	**690V (2)**
VM_SUPPLY_LOSS_LEVEL[MIN]	205	410	540	540

(1) Unidrive M frame size 5 and above only

(2) Unidrive M frame size 7 and above only

Identifier	VM_TORQUE_CURRENT
Description	Range applied to torque and torque producing current parameters.
Units	%
Range of [MIN]	-1000.0 to 0.0
Range of [MAX]	0.0 to 1000.0

***Select Motor 2 Parameters* (11.045)**	**VM_TORQUE_CURRENT[MAX]**
0	VM_MOTOR1_CURRENT_LIMIT[MAX]
1	VM_MOTOR2_CURRENT_LIMIT[MAX]

VM_TORQUE_CURRENT[MIN] = -VM_TORQUE_CURRENT[MAX]

Identifier	VM_TORQUE_CURRENT_UNIPOLAR
Description	Unipolar version of VM_TORQUE_CURRENT
Units	%
Range of [MIN]	0.0
Range of [MAX]	0.0 to 1000.0

VM_TORQUE_CURRENT_UNIPOLAR[MAX] = VM_TORQUE_CURRENT[MAX]

VM_TORQUE_CURRENT_UNIPOLAR[MIN] =0.0

Identifier	VM_USER_CURRENT
Description	Range applied to torque reference and percentage load parameters
Units	%
Range of [MIN]	-1000.0 to 0.0
Range of [MAX]	0.0 to 1000.0

VM_USER_CURRENT[MAX] = *User Current Maximum Scaling* (04.024)

VM_USER_CURRENT[MIN] = -VM_USER_CURRENT[MAX]

Menu 1 Single Line Descriptions − *Frequency References*

Mode: RFC-A

Parameter		Range	Default	Type					
01.001	Reference Selected	±VM_SPEED_FREQ_REF Hz		RO	Num	ND	NC	PT	
01.002	Pre-skip Filter Reference	±VM_SPEED_FREQ_REF Hz		RO	Num	ND	NC	PT	
01.003	Pre-ramp Reference	±VM_SPEED_FREQ_REF Hz		RO	Num	ND	NC	PT	
01.004	Reference Offset	±VM_SPEED_FREQ_REF Hz	0.00 Hz	RW	Num				US
01.005	Jog Reference	0.00 to 300.00 Hz	1.50 Hz	RW	Num				US
01.006	Maximum Speed	±VM_POSITIVE_REF_CLAMP Hz	50Hz: 50.00 Hz 60Hz: 60.00 Hz	RW	Num				US
01.007	Minimum Speed	±VM_NEGATIVE_REF_CLAMP1 Hz	0.00 Hz	RW	Num				US
01.008	Negative Reference Clamp Enable	Off (0) or On (1)	Off (0)	RW	Bit				US
01.009	Reference Offset Select	0 to 2	0	RW	Num				US
01.010	Bipolar Reference Enable	Off (0) or On (1)	Off (0)	RW	Bit				US
01.011	Reference On	Off (0) or On (1)		RO	Bit	ND	NC	PT	
01.012	Reverse Select	Off (0) or On (1)		RO	Bit	ND	NC	PT	
01.013	Jog Select	Off (0) or On (1)		RO	Bit	ND	NC	PT	
01.014	Reference Selector	A1 A2 (0), A1 Preset (1), A2 Preset (2), Preset (3), Keypad (4), Reserved (5), Keypad Ref (6)	A1 A2 (0)	RW	Txt				US
01.015	Preset Selector	0 to 9	0	RW	Num				US
01.016	Preset Selector Timer	0.0 to 400.0 s	10.0 s	RW	Num				US
01.017	Keypad Control Mode Reference	±VM_SPEED_FREQ_USER_REFS Hz	0.00 Hz	RO	Num		NC	PT	PS
01.021	Preset Reference 1	±VM_SPEED_FREQ_REF Hz	0.00 Hz	RW	Num				US
01.022	Preset Reference 2	±VM_SPEED_FREQ_REF Hz	0.00 Hz	RW	Num				US
01.023	Preset Reference 3	±VM_SPEED_FREQ_REF Hz	0.00 Hz	RW	Num				US
01.024	Preset Reference 4	±VM_SPEED_FREQ_REF Hz	0.00 Hz	RW	Num				US
01.025	Preset Reference 5	±VM_SPEED_FREQ_REF Hz	0.00 Hz	RW	Num				US
01.026	Preset Reference 6	±VM_SPEED_FREQ_REF Hz	0.00 Hz	RW	Num				US
01.027	Preset Reference 7	±VM_SPEED_FREQ_REF Hz	0.00 Hz	RW	Num				US
01.028	Preset Reference 8	±VM_SPEED_FREQ_REF Hz	0.00 Hz	RW	Num				US
01.029	Skip Reference 1	0.00 to 550.00 Hz	0.00 Hz	RW	Num				US
01.030	Skip Reference Band 1	0.00 to 25.00 Hz	0.50 Hz	RW	Num				US
01.031	Skip Reference 2	0.00 to 550.00 Hz	0.00 Hz	RW	Num				US
01.032	Skip Reference Band 2	0.00 to 25.00 Hz	0.50 Hz	RW	Num				US
01.033	Skip Reference 3	0.00 to 550.00 Hz	0.00 Hz	RW	Num				US
01.034	Skip Reference Band 3	0.00 to 25.00 Hz	0.50 Hz	RW	Num				US
01.035	Reference In Rejection Zone	Off (0) or On (1)		RO	Bit	ND	NC	PT	
01.036	Analog Reference 1	±VM_SPEED_FREQ_USER_REFS Hz	0.00 Hz	RO	Num		NC		
01.037	Analog Reference 2	±VM_SPEED_FREQ_USER_REFS Hz	0.00 Hz	RO	Num		NC		
01.038	Percentage Trim	±100.00 %	0.00 %	RW	Num		NC		
01.041	Reference Select Flag 1	Off (0) or On (1)	Off (0)	RW	Bit		NC		
01.042	Reference Select Flag 2	Off (0) or On (1)	Off (0)	RW	Bit		NC		
01.043	Reference Select Flag 3	Off (0) or On (1)	Off (0)	RW	Bit		NC		
01.045	Preset Select Flag 1	Off (0) or On (1)	Off (0)	RW	Bit		NC		
01.046	Preset Select Flag 2	Off (0) or On (1)	Off (0)	RW	Bit		NC		
01.047	Preset Select Flag 3	Off (0) or On (1)	Off (0)	RW	Bit		NC		
01.048	Preset Selector Timer Reset	Off (0) or On (1)	Off (0)	RW	Bit		NC		
01.049	Reference Selected Indicator	1 to 6		RO	Num	ND	NC	PT	
01.050	Preset Selected Indicator	1 to 8		RO	Num	ND	NC	PT	
01.051	Power-up Keypad Control Mode Reference	Reset (0), Last (1), Preset (2)	Reset (0)	RW	Txt				US
01.057	Force Reference Direction	None (0), Forward (1), Reverse (2)	None (0)	RW	Txt				
01.069	Reference in rpm	±33000 rpm		RO	Num	ND	NC	PT	
01.070	Clamped Reference	±VM_SPEED_FREQ_REF Hz		RO	Num	ND	NC	PT	
01.071	Alternative Reference	±VM_SPEED_FREQ_REF Hz	0.00 Hz	RO	Num		NC		
01.072	Alternative Reference Enable	Off (0) or On (1)		RO	Bit	ND	NC	PT	

RW	Read / Write	RO	Read-only	Bit	Bit parameter	Txt	Text string	Date	Date parameter	Time	Time parameter
Chr	Character parameter	Bin	Binary parameter	IP	IP address	Mac	MAC address	Ver	Version number	SMP	Slot, menu, parameter
Num	Number parameter	DE	Destination	ND	No default value	RA	Rating dependent	NC	Non-copyable	PT	Protected
FI	Filtered	US	User save	PS	Power-down save						

Menu 1 − *Frequency References*

Mode: RFC-A

References

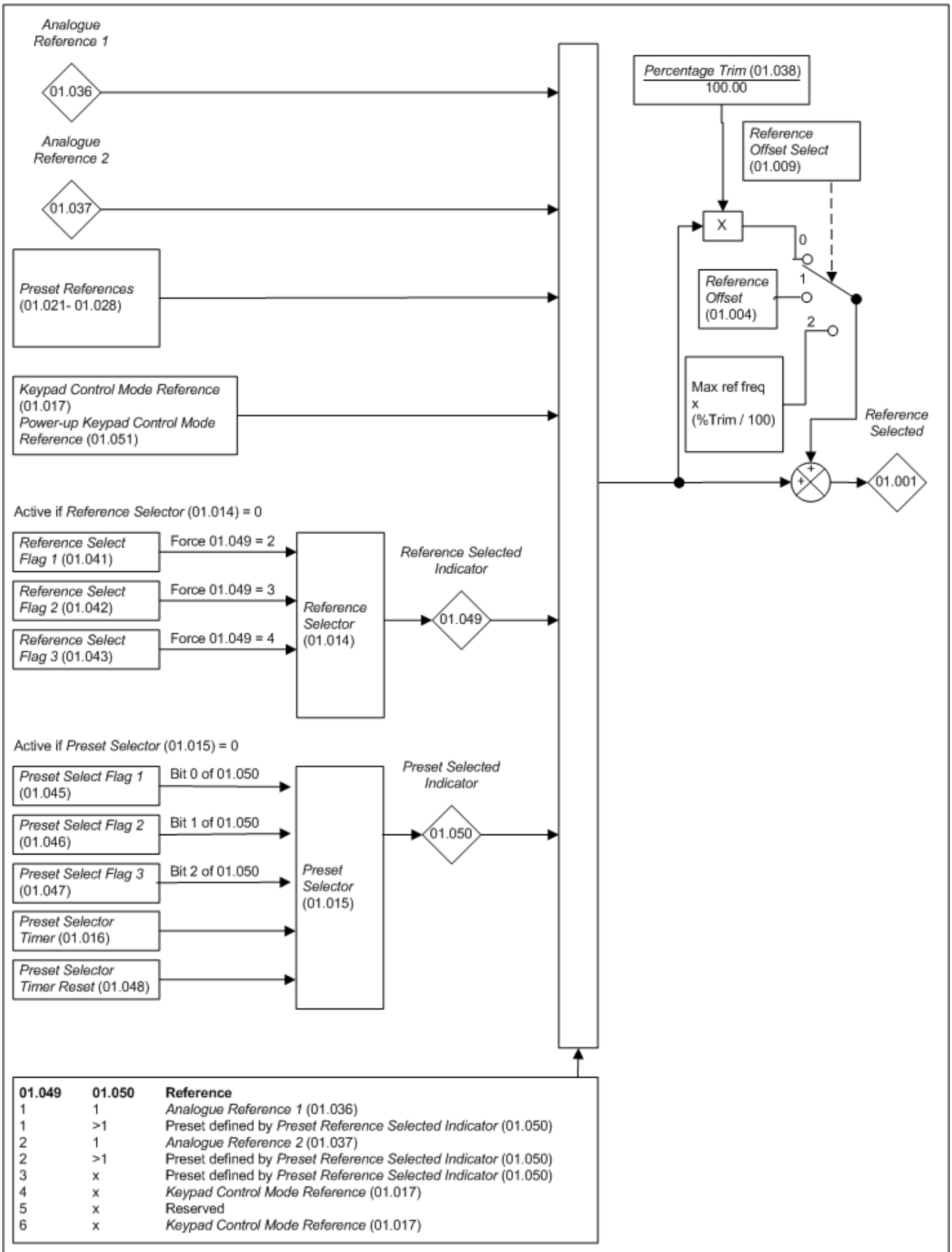

01.049	01.050	Reference
1	1	*Analogue Reference 1* (01.036)
1	>1	Preset defined by *Preset Reference Selected Indicator* (01.050)
2	1	*Analogue Reference 2* (01.037)
2	>1	Preset defined by *Preset Reference Selected Indicator* (01.050)
3	x	Preset defined by *Preset Reference Selected Indicator* (01.050)
4	x	*Keypad Control Mode Reference* (01.017)
5	x	Reserved
6	x	*Keypad Control Mode Reference* (01.017)

Fig.1.1: Reference Select

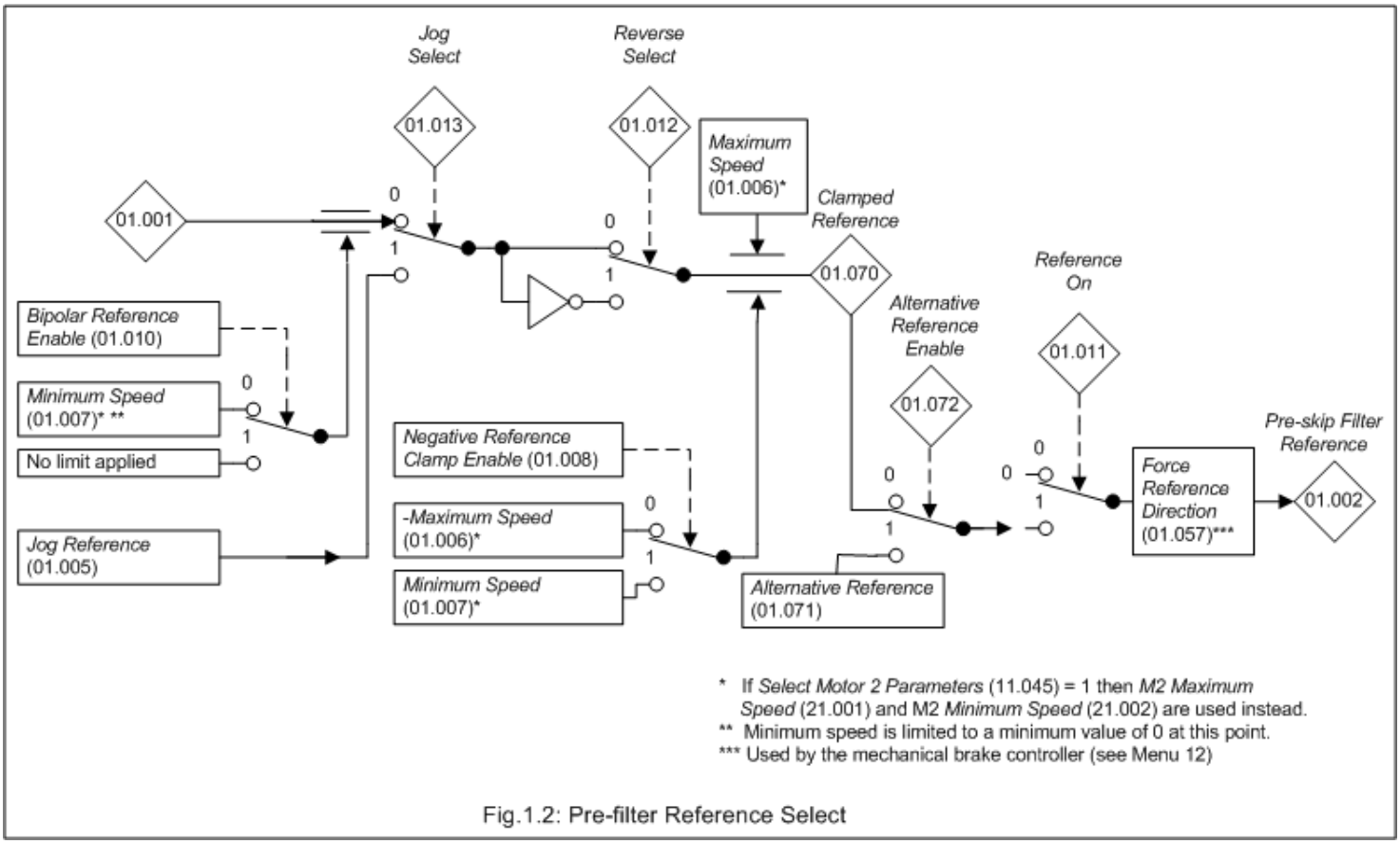

Fig.1.2: Pre-filter Reference Select

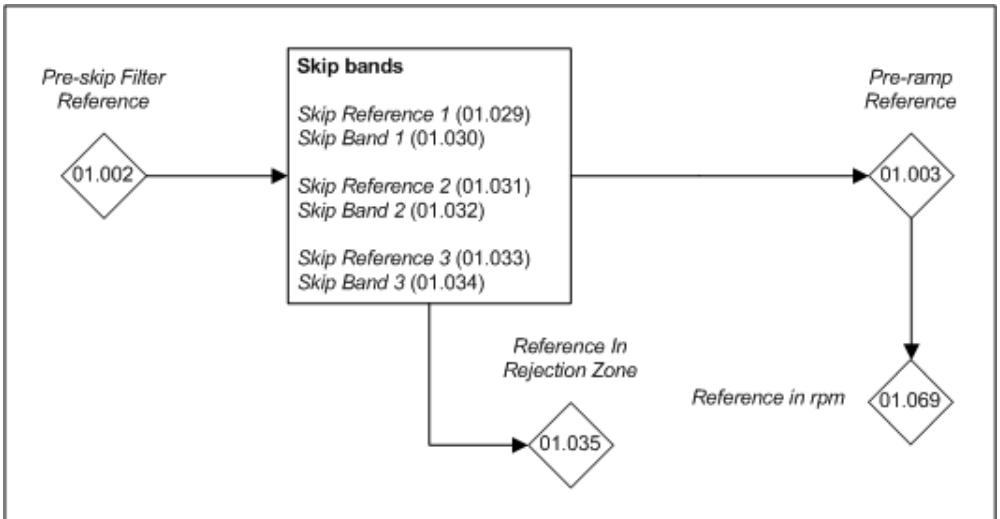

Fig.1.3: Pre-ramp Reference Select

Parameter	01.001 *Reference Selected*		
Short description	Displays the basic reference selected from the available sources		
Mode	RFC-A		
Minimum	-VM_SPEED_FREQ_REF	Maximum	VM_SPEED_FREQ_REF
Default		Units	Hz
Type	32 Bit Volatile	Update Rate	4ms write
Display Format	Standard	Decimal Places	2
Coding	RO, VM, ND, NC, PT		

Reference Selected (01.001) is the basic reference selected from the available sources including the effect of the reference offset. See Fig.1.1.

Parameter	01.002 *Pre-skip Filter Reference*		
Short description	Displays the level of the reference after the reference clamps		
Mode	RFC-A		
Minimum	-VM_SPEED_FREQ_REF	Maximum	VM_SPEED_FREQ_REF
Default		Units	Hz
Type	32 Bit Volatile	Update Rate	4ms write
Display Format	Standard	Decimal Places	2
Coding	RO, VM, ND, NC, PT		

Pre-skip Filter Reference (01.002) is the reference before the skip filtering as indicated in Fig. 1.2.

Parameter	**01.003** ***Pre-ramp Reference***		
Short description	Displays the final output from the reference system		
Mode	RFC-A		
Minimum	−VM_SPEED_FREQ_REF	Maximum	VM_SPEED_FREQ_REF
Default		Units	Hz
Type	32 Bit Volatile	Update Rate	4ms write
Display Format	Standard	Decimal Places	2
Coding	RO, VM, ND, NC, PT		

Fig.1.3 shows the process from the *Pre-skip Filter Reference* (01.002) to the *Pre-ramp Reference* (01.003). The *Pre-ramp Reference* (01.003) is the final output from the Menu 01 reference system that is fed into the Menu 02 ramp system.

Parameter	**01.004** ***Reference Offset***		
Short description	Defines the the offset applied to the reference		
Mode	RFC-A		
Minimum	−VM_SPEED_FREQ_REF	Maximum	VM_SPEED_FREQ_REF
Default	0.00	Units	Hz
Type	32 Bit User Save	Update Rate	4ms read
Display Format	Standard	Decimal Places	2
Coding	RW, VM		

If *Reference Offset Select* (01.009) = 0 then *Reference Selected* (01.001) is the selected reference multiplied by [1 + *Percentage Trim* (01.038) / 100.00)].

If *Reference Offset Select* (01.009) = 1 then the *Reference Offset* (01.004) is added to the selected reference to give *Reference Selected* (01.001).

If *Reference Offset Select* (01.009) = 2 then *Reference Selected* (01.001) is the selected reference plus the M*aximum reference frequency* multiplied by (*Percentage Trim* (01.038) / 100.00). *Maximum reference frequency* is normally the value of *Maximum Speed* (01.006) but refer to Variable Maximum VM_SPEED_FREQ_REF for a full definition.

Parameter	**01.005** ***Jog Reference***		
Short description	Defines the reference when jog is enabled		
Mode	RFC-A		
Minimum	0.00	Maximum	300.00
Default	1.50	Units	Hz
Type	16 Bit User Save	Update Rate	4ms read
Display Format	Standard	Decimal Places	2
Coding	RW, BU		

Parameter	**01.006** ***Maximum Speed***		
Short description	Defines the maximum value for the reference		
Mode	RFC-A		
Minimum	−VM_POSITIVE_REF_CLAMP	Maximum	VM_POSITIVE_REF_CLAMP
Default	See exceptions below	Units	Hz
Type	32 Bit User Save	Update Rate	Background read
Display Format	Standard	Decimal Places	2
Coding	RW, VM		

Region	***Default Value***
50Hz	50.00
60Hz	60.00

Maximum Speed (01.006) provides a limit on the maximum speed demand. (If *Select Motor 2 Parameters* (11.045) = 1 then *M2 Maximum Speed* (21.001) is used instead.)

Parameter	**01.007** ***Minimum Speed***		
Short description	Defines the minimum value for the reference		
Mode	RFC-A		
Minimum	−VM_NEGATIVE_REF_CLAMP1	Maximum	VM_NEGATIVE_REF_CLAMP1
Default	0.00	Units	Hz
Type	32 Bit User Save	Update Rate	Background read
Display Format	Standard	Decimal Places	2
Coding	RW, VM		

If *Negative Reference Clamp Enable* (01.008) = 1 then *Minimum Speed* (01.007) is forced to be a negative value and is applied to the final reference as the negative limit. If *Negative Reference Clamp Enable* (01.008) = 0 then - *Maximum Speed* (01.006) is applied to the final reference as the negative limit. (If *Select Motor 2 Parameters* (11.045) = 1 then *M2 Minimum Speed* (21.002) is used instead.)

The minimum speed is also used to provide the minimum speed limit for uni-polar mode (i.e. *Bipolar Reference Enable* (01.010) = 0) after the *Reference Selected* (01.001) as shown in Fig.1.2.

Parameter	01.008 *Negative Reference Clamp Enable*		
Short description	Set to 1 to allow the minimum reference clamp value to be negative		
Mode	RFC-A		
Minimum	0	Maximum	1
Default	0	Units	
Type	1 Bit User Save	Update Rate	Background read
Display Format	Standard	Decimal Places	0
Coding	RW		

See *Minimum Speed* (01.007).

Parameter	01.009 *Reference Offset Select*		
Short description	Enables the use of the reference offset		
Mode	RFC-A		
Minimum	0	Maximum	2
Default	0	Units	
Type	8 Bit User Save	Update Rate	4ms read
Display Format	Standard	Decimal Places	0
Coding	RW		

See *Reference Offset* (01.004).

Parameter	01.010 *Bipolar Reference Enable*		
Short description	Enables the minimum value of the reference to be negative		
Mode	RFC-A		
Minimum	0	Maximum	1
Default	0	Units	
Type	1 Bit User Save	Update Rate	4ms read
Display Format	Standard	Decimal Places	0
Coding	RW		

See *Minimum Speed* (01.007).

Parameter	01.011 *Reference On*		
Short description	Indicates that the reference from the reference system is active		
Mode	RFC-A		
Minimum	0	Maximum	1
Default		Units	
Type	1 Bit Volatile	Update Rate	2ms write
Display Format	Standard	Decimal Places	0
Coding	RO, ND, NC, PT		

Reference On (01.011), which is controlled by the drive sequencer (see Menu 06) indicates that the reference from the reference system is active. Note that *Reference On* (01.011) is also used to enable and disable the *Hard Frequency Reference* (03.022).

Parameter	01.012 *Reverse Select*		
Short description	Indicates when the reverse function is active		
Mode	RFC-A		
Minimum	0	Maximum	1
Default		Units	
Type	1 Bit Volatile	Update Rate	2ms write
Display Format	Standard	Decimal Places	0
Coding	RO, ND, NC, PT		

Reverse Select (01.012), which is controlled by the drive sequencer (see Menu 06), is used to invert *Reference Selected* (01.001) or the *Jog Reference* (01.005).

Parameter	01.013 *Jog Select*		
Short description	Indicates when the jog function is active		
Mode	RFC-A		
Minimum	0	Maximum	1
Default		Units	
Type	1 Bit Volatile	Update Rate	2ms write
Display Format	Standard	Decimal Places	0
Coding	RO, ND, NC, PT		

Jog Select (01.013) which is controlled by the drive sequencer (see Menu 06), is used to select the *Jog Reference* (01.005).

Parameter	01.014 *Reference Selector*		
Short description	Defines the source for the reference		
Mode	RFC-A		
Minimum	0	Maximum	6
Default	0	Units	
Type	8 Bit User Save	Update Rate	4ms read
Display Format	Standard	Decimal Places	0
Coding	RW, TE		

Value	*Text*	*Description*
0	A1 A2	Analogue reference 1 or 2 selected by terminal input
1	A1 Preset	Analogue reference 1 or Presets selected by terminal input
2	A2 Preset	Analogue reference 2 or Presets selected by terminal input
3	Preset	Preset reference selected by terminal
4	Keypad	Keypad reference selected
5	Reserved	Reserved
6	Keypad Ref	Keypad reference selected but no control mode

See *Control Word Enable* (06.043) which will take priority over *Reference Selector* (01.014).

Reference Selector (01.014) is automatically set up when a new drive configuration is programmed (see *Drive Configuration* (11.034)).

Reference Selector (01.014) defines how *Reference Selected Indicator* (01.049) is derived. If *Reference Selector* (01.014) is not set to 0 *Reference Selected Indicator* (01.049) is equal to *Reference Selector* (01.014). If *Reference Selector* (01.014) = 0 then *Reference Selected Indicator* (01.049) is controlled by the reference select flags as shown below. The higher numbered flags have priority over the lower numbered flags.

Reference select flag states	***Reference Selected Indicator* (01.049)**
All reference select flags equal to 0	1
Reference Select Flag 1 (01.041) = 1	2
Reference Select Flag 2 (01.042) = 1	3
Reference Select Flag 3 (01.043) = 1	4

Preset Selector (01.015) defines how *Preset Selected Indicator* (01.050) is derived as shown below.

***Preset Selector* (01.015)**	***Preset Selected Indicator* (01.050)**
0	Controlled by the preset select flags (01.045 to 01.047)
1	1
2	2
3	3
4	4
5	5
6	6
7	7
8	8
9	Controlled by the present reference selector timer (see *Preset Selector Timer* (01.016))

When *Preset Selector* (01.015) = 0 then *Preset Selected Indicator* (01.050) is defined by the preset select flags as shown below.

Preset Select Flag 3 (01.047)	*Preset Select Flag 2* (01.046)	*Preset Select Flag 1* (01.045)	*Preset Selected Indicator* (01.050)
0	0	0	1
0	0	1	2
0	1	0	3
0	1	1	4
1	0	0	5
1	0	1	6
1	1	0	7
1	1	1	8

Reference Selected Indicator (01.049) and *Preset Selected Indicator* (01.050) then define the reference to be used as shown below.

Reference Selected Indicator (01.049)	*Preset Selected Indicator* (01.050)	Reference
1	1	*Analog Reference 1* (01.036)
1	>1	Preset reference defined by the value of *Preset Selected Indicator* (01.050)
2	1	*Analog Reference 2* (01.037)
2	>1	Preset reference defined by the value of *Preset Selected Indicator* (01.050)
3	x	Preset reference defined by the value of *Preset Selected Indicator* (01.050)
4	x	*Keypad Control Mode Reference* (01.017)
5	x	Not used
6	x	*Keypad Control Mode Reference* (01.017)

If *Reference Selected Indicator* (01.049) = 4 the *Keypad Control Mode Reference* (01.017) is used and the sequencer operates in keypad mode where the start and stop functions are provided from the drive keypad. *Jog Select* (01.013) is always 0 when keypad mode is active.

If *Reference Selected Indicator* (01.049) = 6 the *Keypad Control Mode Reference* (01.017) is used, but keypad start and stop switches are not active.

Parameter	**01.015 *Preset Selector***		
Short description	Defines which preset is used for the reference		
Mode	RFC-A		
Minimum	0	Maximum	9
Default	0	Units	
Type	8 Bit User Save	Update Rate	4ms read
Display Format	Standard	Decimal Places	0
Coding	RW		

See *Reference Selector* (01.014).

Parameter	**01.016 *Preset Selector Timer***		
Short description	Defines the time between changes of preset selector		
Mode	RFC-A		
Minimum	0.0	Maximum	400.0
Default	10.0	Units	s
Type	16 Bit User Save	Update Rate	Background read
Display Format	Standard	Decimal Places	1
Coding	RW		

If *Preset Selector* (01.015) = 9 then *Preset Selected Indicator* (01.050) is incremented by one at intervals defined by *Preset Selector Timer* (01.016). When *Preset Selected Indicator* (01.050) has a value of 8 and is incremented it rolls over to 1. If *Preset Selector Timer Reset* (01.048) = 1 and *Preset Selector* (01.015) = 9, then *Preset Selected Indicator* (01.050) is held at 1 and the internal timer is reset.

Parameter	**01.017 *Keypad Control Mode Reference***		
Short description	Displays the value of the keypad reference		
Mode	RFC-A		
Minimum	−VM_SPEED_FREQ_USER_REFS	Maximum	VM_SPEED_FREQ_USER_REFS
Default	0.00	Units	Hz
Type	32 Bit Power Down Save	Update Rate	4ms read
Display Format	Standard	Decimal Places	2
Coding	RO, VM, NC, PT		

See *Reference Selector* (01.014) for selection of the *Keypad Control Mode Reference* (01.017).

Parameter	**01.021 *Preset Reference 1***		
Short description	Defines the value for preset reference 1		
Mode	RFC-A		
Minimum	−VM_SPEED_FREQ_REF	Maximum	VM_SPEED_FREQ_REF
Default	0.00	Units	Hz
Type	32 Bit User Save	Update Rate	4ms read
Display Format	Standard	Decimal Places	2
Coding	RW, VM		

See *Reference Selector* (01.014).

Parameter	**01.022 *Preset Reference 2***		
Short description	Defines the value for preset reference 2		
Mode	RFC-A		
Minimum	−VM_SPEED_FREQ_REF	Maximum	VM_SPEED_FREQ_REF
Default	0.00	Units	Hz
Type	32 Bit User Save	Update Rate	4ms read
Display Format	Standard	Decimal Places	2
Coding	RW, VM		

See *Reference Selector* (01.014).

Parameter	01.023 *Preset Reference 3*		
Short description	Defines the value for preset reference 3		
Mode	RFC-A		
Minimum	−VM_SPEED_FREQ_REF	Maximum	VM_SPEED_FREQ_REF
Default	0.00	Units	Hz
Type	32 Bit User Save	Update Rate	4ms read
Display Format	Standard	Decimal Places	2
Coding	RW, VM		

See *Reference Selector* (01.014).

Parameter	01.024 *Preset Reference 4*		
Short description	Defines the value for preset reference 4		
Mode	RFC-A		
Minimum	−VM_SPEED_FREQ_REF	Maximum	VM_SPEED_FREQ_REF
Default	0.00	Units	Hz
Type	32 Bit User Save	Update Rate	4ms read
Display Format	Standard	Decimal Places	2
Coding	RW, VM		

See *Reference Selector* (01.014).

Parameter	01.025 *Preset Reference 5*		
Short description	Defines the value for preset reference 5		
Mode	RFC-A		
Minimum	−VM_SPEED_FREQ_REF	Maximum	VM_SPEED_FREQ_REF
Default	0.00	Units	Hz
Type	32 Bit User Save	Update Rate	4ms read
Display Format	Standard	Decimal Places	2
Coding	RW, VM		

See *Reference Selector* (01.014).

Parameter	01.026 *Preset Reference 6*		
Short description	Defines the value for preset reference 6		
Mode	RFC-A		
Minimum	−VM_SPEED_FREQ_REF	Maximum	VM_SPEED_FREQ_REF
Default	0.00	Units	Hz
Type	32 Bit User Save	Update Rate	4ms read
Display Format	Standard	Decimal Places	2
Coding	RW, VM		

See *Reference Selector* (01.014).

Parameter	01.027 *Preset Reference 7*		
Short description	Defines the value for preset reference 7		
Mode	RFC-A		
Minimum	−VM_SPEED_FREQ_REF	Maximum	VM_SPEED_FREQ_REF
Default	0.00	Units	Hz
Type	32 Bit User Save	Update Rate	4ms read
Display Format	Standard	Decimal Places	2
Coding	RW, VM		

See *Reference Selector* (01.014).

Parameter	01.028 *Preset Reference 8*		
Short description	Defines the value for preset reference 8		
Mode	RFC-A		
Minimum	−VM_SPEED_FREQ_REF	Maximum	VM_SPEED_FREQ_REF
Default	0.00	Units	Hz
Type	32 Bit User Save	Update Rate	4ms read
Display Format	Standard	Decimal Places	2
Coding	RW, VM		

See *Reference Selector* (01.014).

Parameter	01.029 *Skip Reference 1*		
Short description	Defines the 1st reference point to skip		
Mode	RFC-A		
Minimum	0.00	Maximum	550.00
Default	0.00	Units	Hz
Type	32 Bit User Save	Update Rate	Background read
Display Format	Standard	Decimal Places	2
Coding	RW		

The skip references functions are available to prevent continuous operation within a specified frequency range (i.e. where mechanical resonance may occur). When *Skip Reference 1* (01.029) = 0 Filter 1 is disabled. *Skip Reference Band 1* (01.030) defines the range either side of *Skip Reference 1* (01.029) over which references are rejected in either direction. The actual rejection band is therefore twice that defined by *Skip Reference Band 1* (01.030) with *Skip Reference 1* (01.029) as the centre of the band. When the selected reference is within the rejection band the lower limit of the band is passed through the filter so that reference is always less than demanded.

Filter 2 (*Skip Reference 2* (01.031), *Skip Reference Band 2* (01.032)) and Filter 3 (*Skip Reference 3* (01.033), *Skip Reference Band 3* (01.034)) operate in the same ways as Filter 1.

If any of the filters are active (i.e. the reference is within their rejection band) *Reference In Rejection Zone* (01.035) is set to 1, otherwise it is 0.

This parameter is unipolar, but the skip frequency operates at this frequency for both directions of rotation.

Parameter	01.030 *Skip Reference Band 1*		
Short description	Defines the range either side of skip reference 1 to be implemented		
Mode	RFC-A		
Minimum	0.00	Maximum	25.00
Default	0.50	Units	Hz
Type	16 Bit User Save	Update Rate	Background read
Display Format	Standard	Decimal Places	2
Coding	RW, BU		

See *Skip Reference 1* (01.029).

Parameter	01.031 *Skip Reference 2*		
Short description	Defines the 2nd reference point to skip		
Mode	RFC-A		
Minimum	0.00	Maximum	550.00
Default	0.00	Units	Hz
Type	32 Bit User Save	Update Rate	Background read
Display Format	Standard	Decimal Places	2
Coding	RW		

See *Skip Reference 1* (01.029).

Parameter	01.032 *Skip Reference Band 2*		
Short description	Defines the range either side of skip reference 2 to be implemented		
Mode	RFC-A		
Minimum	0.00	Maximum	25.00
Default	0.50	Units	Hz
Type	16 Bit User Save	Update Rate	Background read
Display Format	Standard	Decimal Places	2
Coding	RW, BU		

See *Skip Reference 1* (01.029).

Parameter	01.033 *Skip Reference 3*		
Short description	Defines the 3rdreference point to skip		
Mode	RFC-A		
Minimum	0.00	Maximum	550.00
Default	0.00	Units	Hz
Type	32 Bit User Save	Update Rate	Background read
Display Format	Standard	Decimal Places	2
Coding	RW		

See *Skip Reference 1* (01.029).

Parameter	01.034 *Skip Reference Band 3*		
Short description	Defines the range either side of skip reference 3 to be implemented		
Mode	RFC-A		
Minimum	0.00	Maximum	25.00
Default	0.50	Units	Hz
Type	16 Bit User Save	Update Rate	Background read
Display Format	Standard	Decimal Places	2
Coding	RW, BU		

See *Skip Reference 1* (01.029).

Parameter	01.035 *Reference In Rejection Zone*		
Short description	Displays when the reference is in 1 of the pre-defined rejection zones		
Mode	RFC-A		
Minimum	0	Maximum	1
Default		Units	
Type	1 Bit Volatile	Update Rate	4ms write
Display Format	Standard	Decimal Places	0
Coding	RO, ND, NC, PT		

See *Skip Reference 1* (01.029).

Parameter	01.036 *Analog Reference 1*		
Short description	Defines the relationship between the final value from analog 1 input and the frequency or speed reference		
Mode	RFC-A		
Minimum	−VM_SPEED_FREQ_USER_REFS	Maximum	VM_SPEED_FREQ_USER_REFS
Default	0.00	Units	Hz
Type	32 Bit Volatile	Update Rate	1ms read
Display Format	Standard	Decimal Places	2
Coding	RO, VM, NC		

Analog Reference 1 (01.036) or *Analog Reference 2* (01.037) should be used as the destinations for drive analog inputs when these provide the frequency reference. The variable maximum/minimum applied to *Analog Reference 1* (01.036) or *Analog Reference 2* (01.037) gives the relationship shown below between the final value from the analog input and the frequency reference.

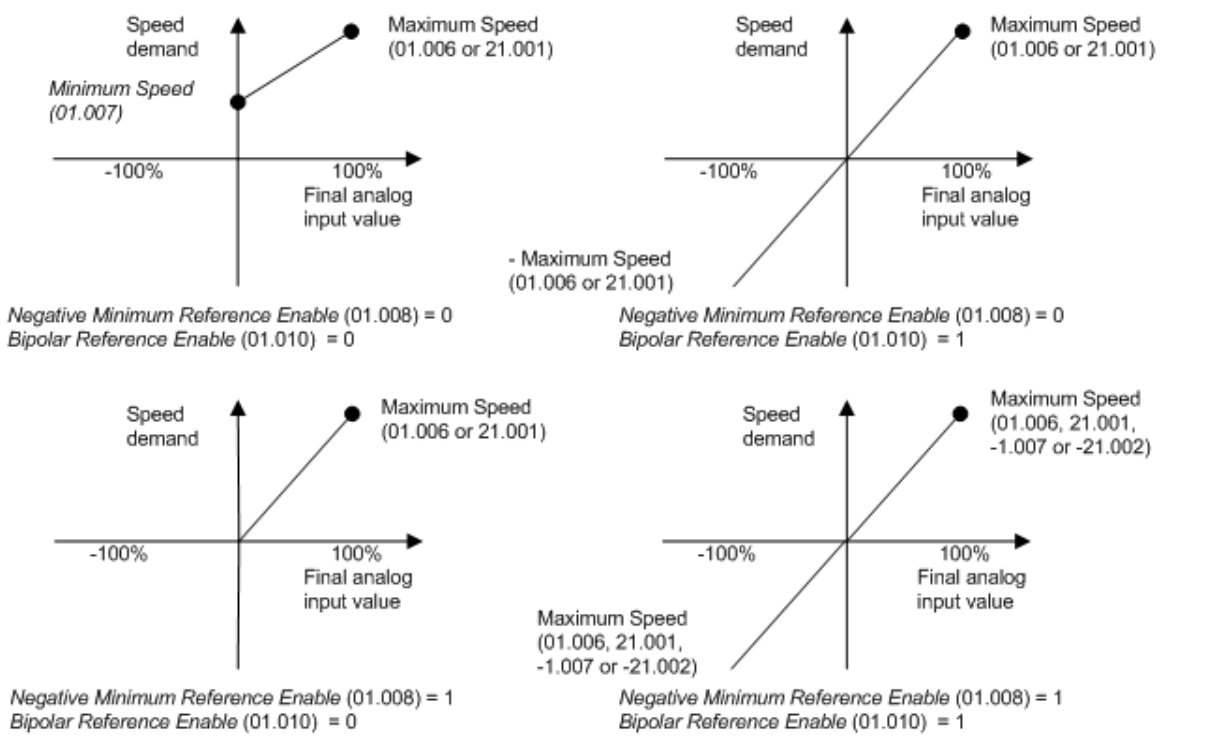

Fig.1.4: Reference from an analog input

Parameter	01.037 *Analog Reference 2*		
Short description	Defines the relationship between the final value from analog input 2 and the frequency or speed reference		
Mode	RFC-A		
Minimum	−VM_SPEED_FREQ_USER_REFS	Maximum	VM_SPEED_FREQ_USER_REFS
Default	0.00	Units	Hz
Type	32 Bit Volatile	Update Rate	4ms read
Display Format	Standard	Decimal Places	2
Coding	RO, VM, NC		

See *Analog Reference 1* (01.036).

Parameter	01.038 *Percentage Trim*		
Short description	Defines the value of the reference trim as a percentage		
Mode	RFC-A		
Minimum	-100.00	Maximum	100.00
Default	0.00	Units	%
Type	16 Bit Volatile	Update Rate	4ms read
Display Format	Standard	Decimal Places	2
Coding	RW, NC		

See *Reference Offset* (01.004).

Parameter	01.041 *Reference Select Flag 1*		
Short description	Defines which reference is selected by the drive		
Mode	RFC-A		
Minimum	0	Maximum	1
Default	0	Units	
Type	1 Bit Volatile	Update Rate	4ms read
Display Format	Standard	Decimal Places	0
Coding	RW, NC		

See *Reference Selector* (01.014).

Parameter	01.042 *Reference Select Flag 2*		
Short description	Defines which reference is selected by the drive		
Mode	RFC-A		
Minimum	0	Maximum	1
Default	0	Units	
Type	1 Bit Volatile	Update Rate	4ms read
Display Format	Standard	Decimal Places	0
Coding	RW, NC		

See *Reference Selector* (01.014).

Parameter	01.043 *Reference Select Flag 3*		
Short description	Defines which reference is selected by the drive		
Mode	RFC-A		
Minimum	0	Maximum	1
Default	0	Units	
Type	1 Bit Volatile	Update Rate	4ms read
Display Format	Standard	Decimal Places	0
Coding	RW, NC		

See *Reference Selector* (01.014).

Parameter	01.045 *Preset Select Flag 1*		
Short description	Defines which preset is selected by the drive		
Mode	RFC-A		
Minimum	0	Maximum	1
Default	0	Units	
Type	1 Bit Volatile	Update Rate	4ms read
Display Format	Standard	Decimal Places	0
Coding	RW, NC		

See *Reference Selector* (01.014).

Parameter	01.046 *Preset Select Flag 2*		
Short description	Defines which preset is selected by the drive		
Mode	RFC-A		
Minimum	0	Maximum	1
Default	0	Units	
Type	1 Bit Volatile	Update Rate	4ms read
Display Format	Standard	Decimal Places	0
Coding	RW, NC		

See *Reference Selector* (01.014).

Parameter	01.047 *Preset Select Flag 3*		
Short description	Defines which preset is selected by the drive		
Mode	RFC-A		
Minimum	0	Maximum	1
Default	0	Units	
Type	1 Bit Volatile	Update Rate	4ms read
Display Format	Standard	Decimal Places	0
Coding	RW, NC		

See *Reference Selector* (01.014).

Parameter	01.048 *Preset Selector Timer Reset*		
Short description	Set to 1 to hold the preset selected indicator at 1		
Mode	RFC-A		
Minimum	0	Maximum	1
Default	0	Units	
Type	1 Bit Volatile	Update Rate	Background read
Display Format	Standard	Decimal Places	0
Coding	RW, NC		

See *Preset Selector Timer* (01.016).

Parameter	01.049 *Reference Selected Indicator*		
Short description	Displays which reference is currently selected		
Mode	RFC-A		
Minimum	1	Maximum	6
Default		Units	
Type	8 Bit Volatile	Update Rate	4ms write
Display Format	Standard	Decimal Places	0
Coding	RO, ND, NC, PT		

See *Reference Selector* (01.014).

Parameter	01.050 *Preset Selected Indicator*		
Short description	Displays which preset is currently selected		
Mode	RFC-A		
Minimum	1	Maximum	8
Default		Units	
Type	8 Bit Volatile	Update Rate	4ms write
Display Format	Standard	Decimal Places	0
Coding	RO, ND, NC, PT		

See *Reference Selector* (01.014).

Parameter	01.051 *Power-up Keypad Control Mode Reference*		
Short description	Defines which value of keypad control mode reference is displayed at power-up		
Mode	RFC-A		
Minimum	0	Maximum	2
Default	0	Units	
Type	8 Bit User Save	Update Rate	Power-up read
Display Format	Standard	Decimal Places	0
Coding	RW, TE		

Value	*Text*	*Description*
0	Reset	Keypad reference is zero
1	Last	Keypad reference is the last used value
2	Preset	Keypad reference is copied from Preset speed 1 (01.21)

Power-up Keypad Control Mode Reference (01.051) defines the value written to *Keypad Control Mode Reference* (01.017) at power-up as given below.

***Power-up Keypad Control Mode Reference* (01.051)**	**Value wrriten to *Keypad Control Mode Reference* (01.017) at power-up**
0	0.0
1	The value in *Keypad Control Mode Reference* (01.017) at the previous power-down
2	The value saved in *Preset Reference 1* (01.021)

Parameter	01.057 *Force Reference Direction*		
Short description	Defines the direction of the reference		
Mode	RFC-A		
Minimum	0	Maximum	2
Default	0	Units	
Type	8 Bit Volatile	Update Rate	4ms read
Display Format	Standard	Decimal Places	0
Coding	RW, TE		

Value	*Text*
0	None
1	Forward
2	Reverse

If *Force Reference Direction* (01.057) = 0 then it has no effect. If *Force Reference Direction* (01.057) is non-zero then the modulus of the reference is used and the sign is defined by the value of *Force Reference Direction* (01.057). If *Force Reference Direction* (01.057) = 1 then *Pre-skip Filter Reference* (01.002) is always positive, and if *Force Reference Direction* (01.057) = 2 then *Pre-skip Filter Reference* (01.002) is always zero or negative.

Parameter	01.069 *Reference in rpm*		
Short description	Displays the value of the reference in rpm		
Mode	RFC-A		
Minimum	-33000	Maximum	33000
Default		Units	rpm
Type	32 Bit Volatile	Update Rate	4ms write
Display Format	Standard	Decimal Places	0
Coding	RO, ND, NC, PT		

Reference in rpm (01.069) = *Pre-ramp Reference* (01.003) x 60 / Pole Pairs (see *Number Of Motor Poles* (05.011)).

Parameter	01.070 *Clamped Reference*		
Short description	Displays the reference that is provided for the PID controller		
Mode	RFC-A		
Minimum	−VM_SPEED_FREQ_REF	Maximum	VM_SPEED_FREQ_REF
Default		Units	Hz
Type	32 Bit Volatile	Update Rate	4ms write
Display Format	Standard	Decimal Places	2
Coding	RO, VM, ND, NC, PT		

The *Clamped Reference* (01.070) is provided as a source for various drive user functions.

Parameter	01.071 *Alternative Reference*		
Short description	Defines the reference which is used as a destination for the output of the PID controller		
Mode	RFC-A		
Minimum	−VM_SPEED_FREQ_REF	Maximum	VM_SPEED_FREQ_REF
Default	0.00	Units	Hz
Type	32 Bit Volatile	Update Rate	4ms read
Display Format	Standard	Decimal Places	2
Coding	RO, VM, NC		

Alternative Reference (01.071) is provided as a destination for an alternative reference if required (such as a drive user function output).

If *Alternative Reference* (01.071) has been programmed as a destination, *Alternative Reference Enable* (01.072) is set to 1 automatically so that the alternative reference is selected.

Parameter	01.072 *Alternative Reference Enable*		
Short description	Indicates when the Alternative Reference is being used		
Mode	RFC-A		
Minimum	0	Maximum	1
Default		Units	
Type	1 Bit Volatile	Update Rate	4ms read
Display Format	Standard	Decimal Places	0
Coding	RO, ND, NC, PT		

See *Alternative Reference* (01.071).

Menu 2 Single Line Descriptions − *Frequency Ramps*

Mode: RFC-A

Parameter		Range	Default	Type					
02.001	Post Ramp Reference	±VM_SPEED_FREQ_REF Hz		RO	Num	ND	NC	PT	
02.002	Ramp Enable	Off (0) or On (1)	On (1)	RW	Bit				US
02.003	Ramp Hold	Off (0) or On (1)	Off (0)	RW	Bit				US
02.004	Ramp Mode Select	Fast (0), Standard (1), Std boost (2), Fast boost (3)	Standard (1)	RW	Txt				US
02.005	Disable Ramp Output	Off (0) or On (1)	Off (0)	RW	Bit				US
02.006	S Ramp Enable	Off (0) or On (1)	Off (0)	RW	Bit				US
02.007	Max Rate Of Change Of Acceleration	0.0 to 300.0 s²/100Hz	3.1 s²/100Hz	RW	Num				US
02.008	Standard Ramp Voltage	±VM_DC_VOLTAGE_SET V	110V drive: 375 V 200V drive: 375 V 400V drive 50Hz: 750 V 400V drive 60Hz: 775 V 575V drive: 895 V 690V drive: 1075 V	RW	Num		RA		US
02.009	Deceleration Fail Detection Disable	Off (0) or On (1)	Off (0)	RW	Bit				US
02.010	Acceleration Rate Selector	0 to 9	0	RW	Num				US
02.011	Acceleration Rate 1	±VM_ACCEL_RATE s	5.0 s	RW	Num				US
02.012	Acceleration Rate 2	±VM_ACCEL_RATE s	5.0 s	RW	Num				US
02.013	Acceleration Rate 3	±VM_ACCEL_RATE s	5.0 s	RW	Num				US
02.014	Acceleration Rate 4	±VM_ACCEL_RATE s	5.0 s	RW	Num				US
02.015	Acceleration Rate 5	±VM_ACCEL_RATE s	5.0 s	RW	Num				US
02.016	Acceleration Rate 6	±VM_ACCEL_RATE s	5.0 s	RW	Num				US
02.017	Acceleration Rate 7	±VM_ACCEL_RATE s	5.0 s	RW	Num				US
02.018	Acceleration Rate 8	±VM_ACCEL_RATE s	5.0 s	RW	Num				US
02.019	Jog Acceleration Rate	±VM_ACCEL_RATE s	0.2 s	RW	Num				US
02.020	Deceleration Rate Selector	0 to 9	0	RW	Num				US
02.021	Deceleration Rate 1	±VM_ACCEL_RATE s	10.0 s	RW	Num				US
02.022	Deceleration Rate 2	±VM_ACCEL_RATE s	10.0 s	RW	Num				US
02.023	Deceleration Rate 3	±VM_ACCEL_RATE s	10.0 s	RW	Num				US
02.024	Deceleration Rate 4	±VM_ACCEL_RATE s	10.0 s	RW	Num				US
02.025	Deceleration Rate 5	±VM_ACCEL_RATE s	10.0 s	RW	Num				US
02.026	Deceleration Rate 6	±VM_ACCEL_RATE s	10.0 s	RW	Num				US
02.027	Deceleration Rate 7	±VM_ACCEL_RATE s	10.0 s	RW	Num				US
02.028	Deceleration Rate 8	±VM_ACCEL_RATE s	10.0 s	RW	Num				US
02.029	Jog Deceleration Rate	±VM_ACCEL_RATE s	0.2 s	RW	Num				US
02.030	Acceleration Rate Selected	0 to 8		RO	Num	ND	NC	PT	
02.031	Deceleration Rate Selected	0 to 8		RO	Num	ND	NC	PT	
02.032	Acceleration Rate Select Bit 0	Off (0) or On (1)	Off (0)	RW	Bit		NC		
02.033	Acceleration Rate Select Bit 1	Off (0) or On (1)	Off (0)	RW	Bit		NC		
02.034	Acceleration Rate Select Bit 2	Off (0) or On (1)	Off (0)	RW	Bit		NC		
02.035	Deceleration Rate Select Bit 0	Off (0) or On (1)	Off (0)	RW	Bit		NC		
02.036	Deceleration Rate Select Bit 1	Off (0) or On (1)	Off (0)	RW	Bit		NC		
02.037	Deceleration Rate Select Bit 2	Off (0) or On (1)	Off (0)	RW	Bit		NC		
02.038	Inertia Compensation Torque	±1000.0 %		RO	Num	ND	NC	PT	
02.039	Ramp Rate Units	0 to 2	0	RW	Num				US
02.040	S Ramp Percentage	0.0 to 50.0 %	0.0 %	RW	Num				US
02.041	S Ramp Set-up Mode	0 to 2	0	RW	Num				US
02.042	Maximum Rate Of Change Of Acceleration 1	0.0 to 300.0 s²/100Hz	0.0 s²/100Hz	RW	Num				US
02.043	Maximum Rate Of Change Of Acceleration 2	0.0 to 300.0 s²/100Hz	0.0 s²/100Hz	RW	Num				US
02.044	Maximum Rate Of Change Of Acceleration 3	0.0 to 300.0 s²/100Hz	0.0 s²/100Hz	RW	Num				US
02.045	Maximum Rate Of Change Of Acceleration 4	0.0 to 300.0 s²/100Hz	0.0 s²/100Hz	RW	Num				US

RW	Read / Write	RO	Read-only	Bit	Bit parameter	Txt	Text string	Date	Date parameter	Time	Time parameter
Chr	Character parameter	Bin	Binary parameter	IP	IP address	Mac	MAC address	Ver	Version number	SMP	Slot, menu, parameter
Num	Number parameter	DE	Destination	ND	No default value	RA	Rating dependent	NC	Non-copyable	PT	Protected
FI	Filtered	US	User save	PS	Power-down save						

Menu 2 − *Frequency Ramps*

Mode: RFC-A

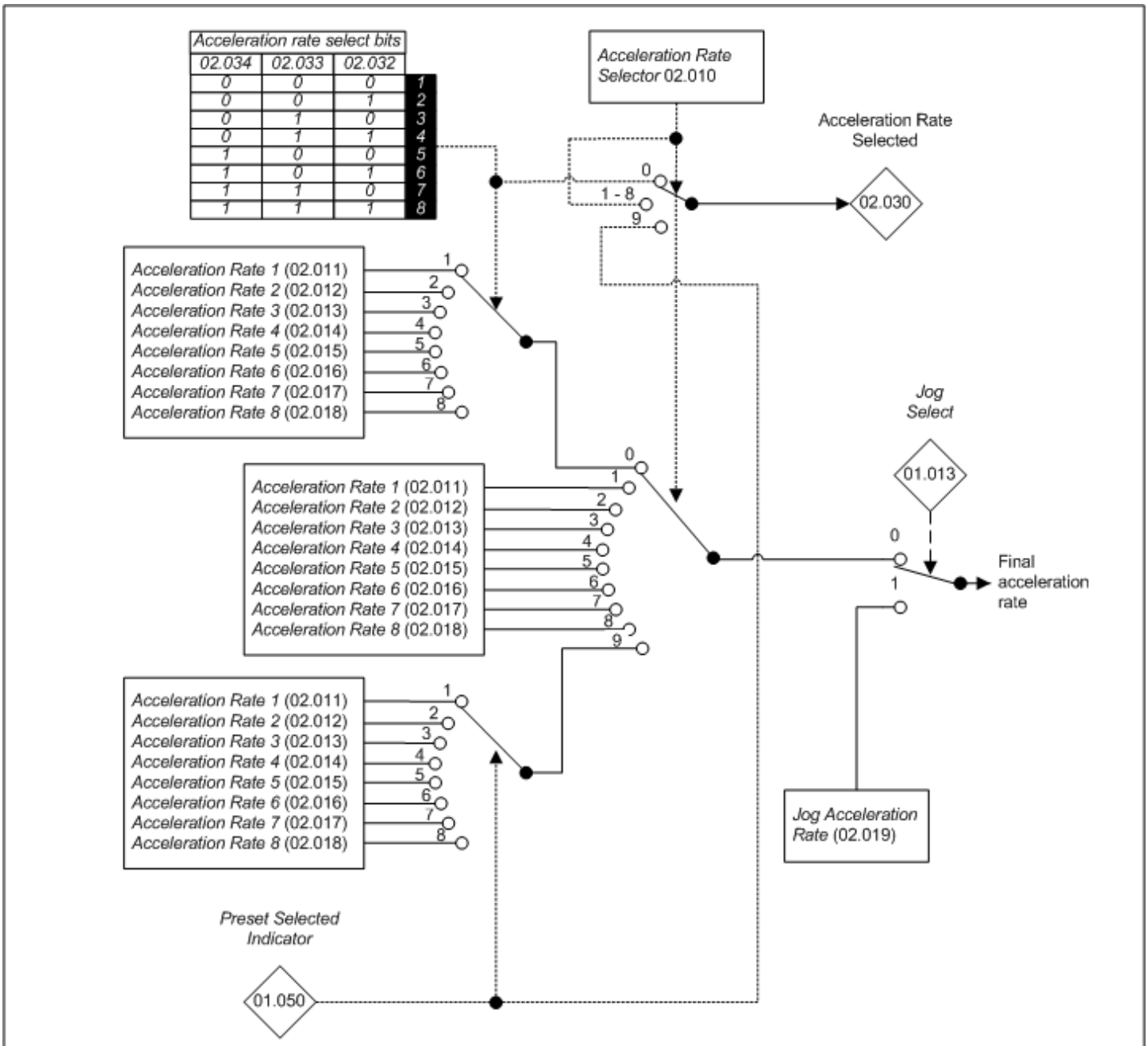

Fig.2.1a: Acceleration rate selection

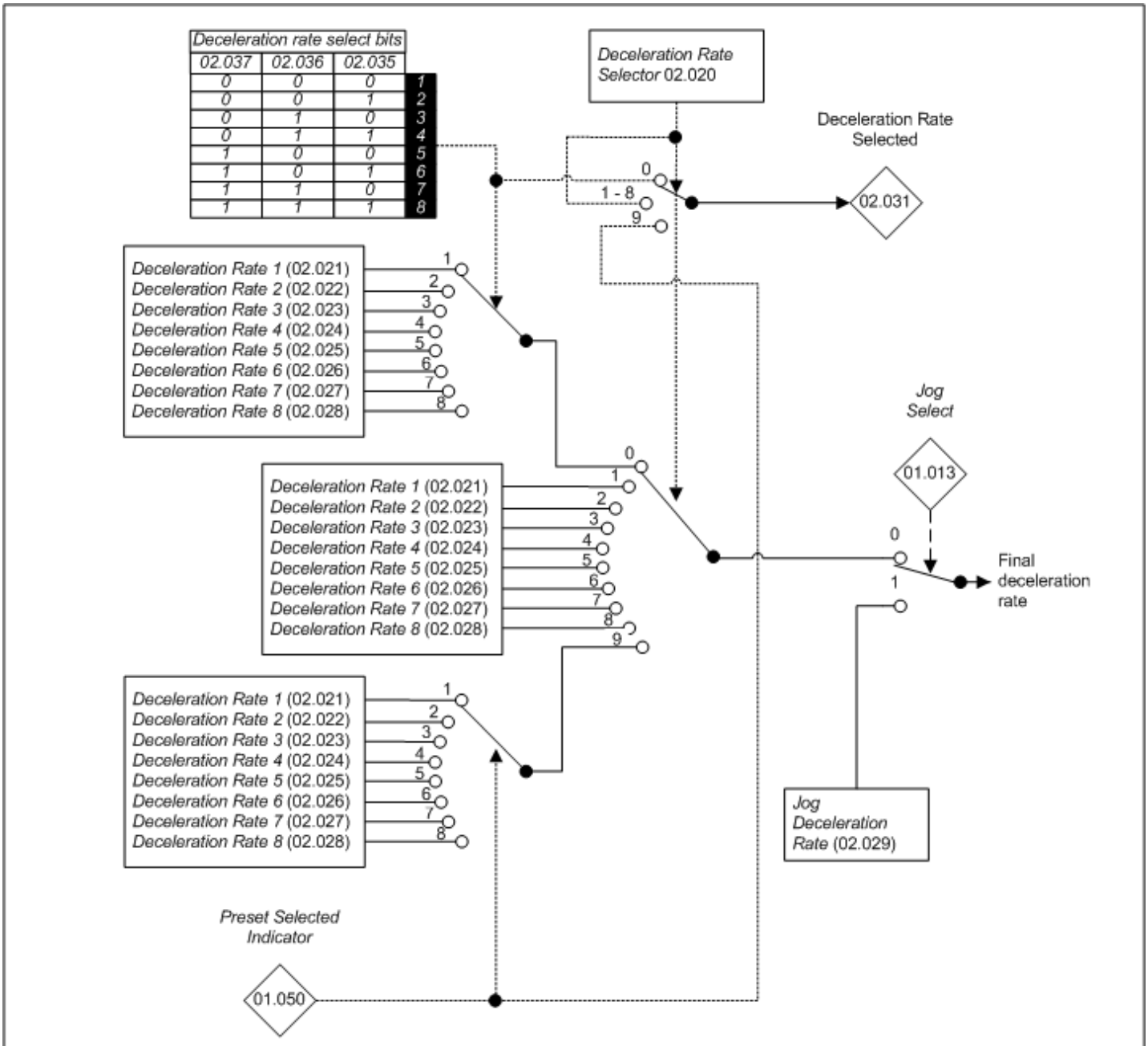

Fig.2.1b: Deceleration rate selection

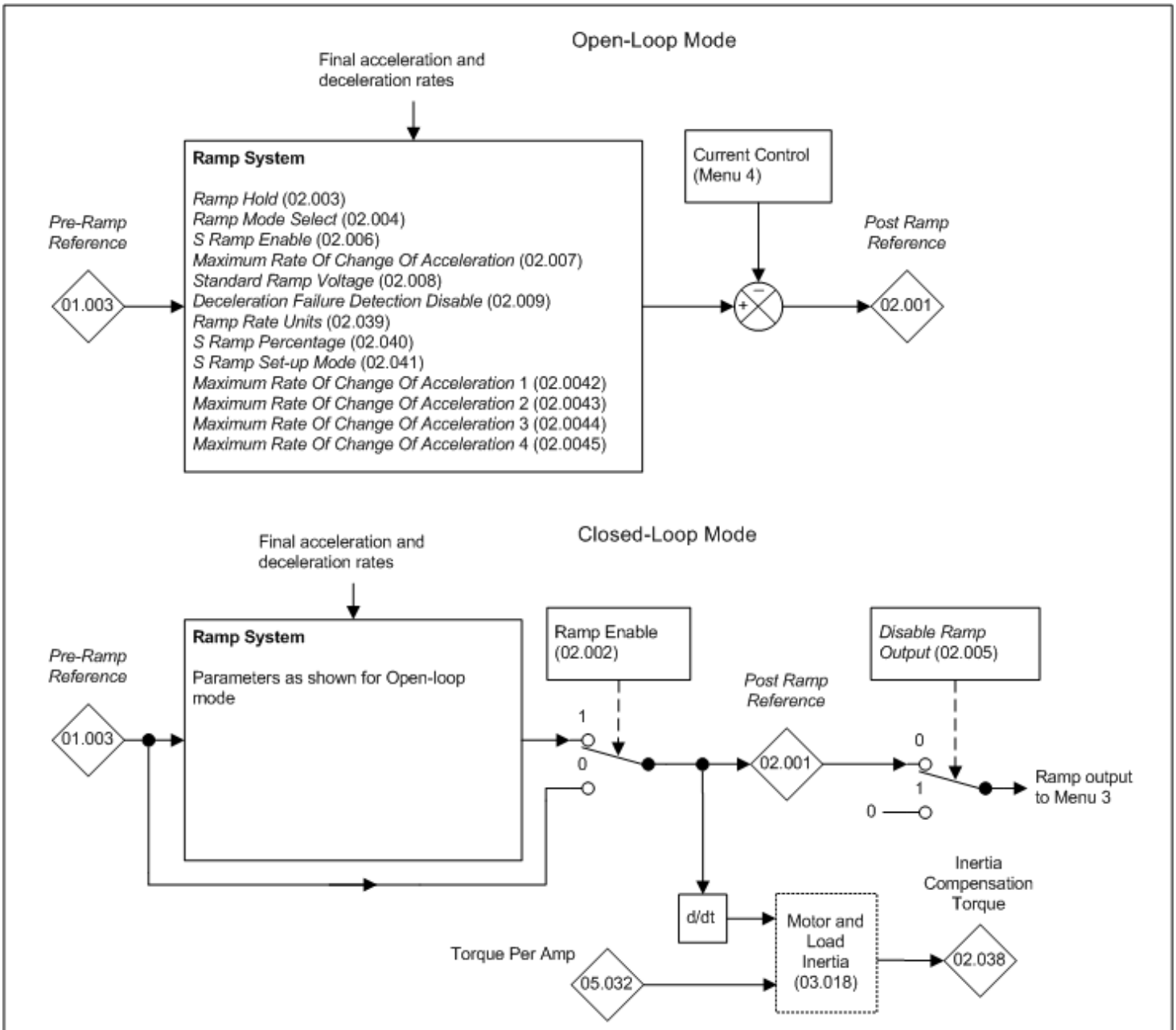

Fig.2.2: Ramp system

Parameter	02.001 *Post Ramp Reference*		
Short description	Displays the output of the ramp system		
Mode	RFC-A		
Minimum	−VM_SPEED_FREQ_REF	Maximum	VM_SPEED_FREQ_REF
Default		Units	Hz
Type	32 Bit Volatile	Update Rate	16ms
Display Format	Standard	Decimal Places	2
Coding	RO, VM, ND, NC, PT		

The *Post Ramp Reference* (02.001) can be combined with the *Hard Frequency Reference* (03.022) to give the final frequency reference at the input to the frequency controller (see Menu 03). If the *Hard Frequency Reference* (03.022) is used alone to give the final frequency reference, and the ramp output is not required, then the ramp output can be disconnected by setting *Disable Ramp Output* (02.005) = 1. This ensures that the reference and ramp systems do not affect the final frequency reference.

Parameter	02.002 *Ramp Enable*		
Short description	Set to 1 to enable the ramp system		
Mode	RFC-A		
Minimum	0	Maximum	1
Default	1	Units	
Type	1 Bit User Save	Update Rate	Background
Display Format	Standard	Decimal Places	0
Coding	RW, BU		

If *Ramp Enable* (02.002) = 1 then the ramp system is present between the *Pre-ramp Reference* (01.003) and the *Post Ramp Reference* (02.001). If *Ramp Enable* (02.002) = 0 then any changes in the *Pre-ramp Reference* (01.003) are reflected immediately in the *Post Ramp Reference* (02.001).

Parameter	**02.003** ***Ramp Hold***		
Short description	Set to 1 to hold the ramp system at its present value		
Mode	RFC-A		
Minimum	0	Maximum	1
Default	0	Units	
Type	1 Bit User Save	Update Rate	1ms
Display Format	Standard	Decimal Places	0
Coding	RW		

If *Ramp Hold* (02.003) = 0 the ramp system functions normally. If *Ramp Hold* (02.003) is set to 1 and *S Ramp Enable* (02.006) = 0 the ramp system output is held at its current level. If *Ramp Hold* (02.003) is subsequently set to 0 the ramp system output is released and continues to operate normally. If *S Ramp Enable* (02.006) = 1 when *Ramp Hold* (02.003) is set to 1 the acceleration will ramp towards zero and the frequency will change in an S curve towards a constant frequency. If a drive stop is requested (i.e. *Reference On* (01.011) = 0) the ramp hold function is disabled.

Parameter	**02.004** ***Ramp Mode Select***		
Short description	Defines the mode used by the ramp system		
Mode	RFC-A		
Minimum	0	Maximum	3
Default	1	Units	
Type	8 Bit User Save	Update Rate	16ms
Display Format	Standard	Decimal Places	0
Coding	RW, TE		

Value	***Text***	***Description***
0	Fast	Fast ramp
1	Standard	Standard ramp with normal motor voltage
2	Std boost	Standard ramp with high motor voltage
3	Fast boost	Fast ramp with high motor volts

Acceleration is defined as a positive (forward) or negative (reverse) frequency change away from zero, and deceleration is defined as a change towards zero. *Ramp Mode Select* (02.004) defines the ramp mode used for deceleration. During acceleration the frequency changes are based on the final acceleration rate only.

0: Fast ramp
During deceleration the frequency changes are based on the final deceleration rate.

1: Standard ramp
The standard ramp controller operates in a similar way to open-loop mode except that once the standard ramp controller becomes active it remains active until the RFC sequencer leaves the deceleration state. It is possible that the frequency may fall faster than the final deceleration rate as the motor reaches standstill.

2: Standard ramp with motor voltage boost
Standard ramp with motor voltage boost is the same as standard ramp mode except that the magnetising current is boosted to increase the motor losses and reduce the deceleration time.

If the *Standard Ramp Voltage* (02.008) is set to a level that is below the nominal d.c. link voltage level the motor will coast during deceleration because the torque producing current reference is limited to prevent the motor from accelerating. There are circumstances where the motor may not decelerated and so there is a system within the drive to detect this. In some circumstances this feature is undesirable and so can be disabled (see *Deceleration Fail Detection Disable* (02.009)).

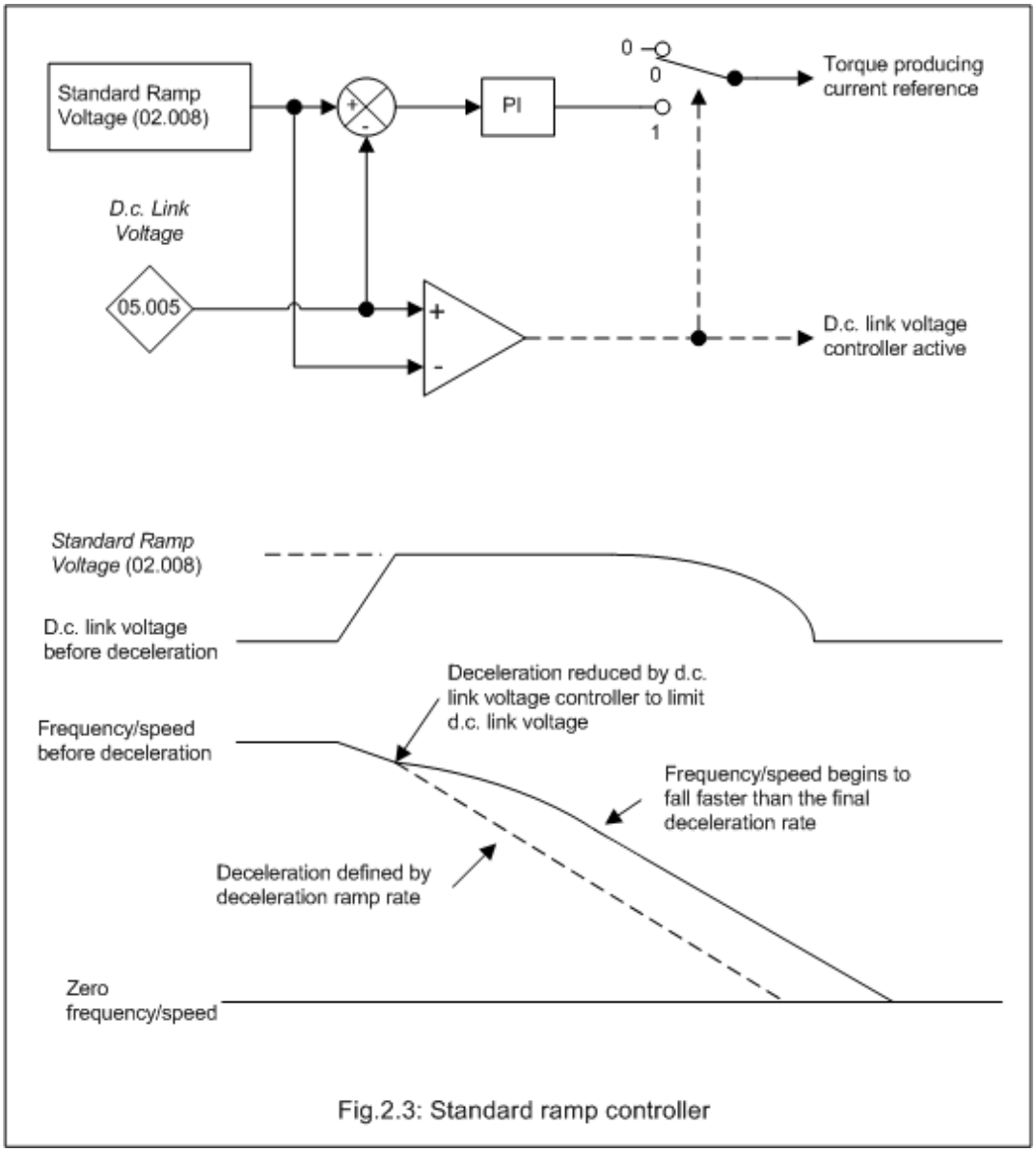

Fig.2.3: Standard ramp controller

3: Fast ramp with motor voltage boost
Fast ramp with motor voltage boost is the same as Fast ramp mode except that the magnetising current is boosted to increase the motor losses and reduce the deceleration time.

Parameter	**02.005 *Disable Ramp Output***		
Short description	Set to 1 to disable the ramp system		
Mode	RFC-A		
Minimum	0	Maximum	1
Default	0	Units	
Type	1 Bit User Save	Update Rate	16ms
Display Format	Standard	Decimal Places	0
Coding	RW		

See *Post Ramp Reference* (02.001).

Parameter	**02.006 *S Ramp Enable***		
Short description	Set to 1 to enable the use of S ramps		
Mode	RFC-A		
Minimum	0	Maximum	1
Default	0	Units	
Type	1 Bit User Save	Update Rate	16ms
Display Format	Standard	Decimal Places	0
Coding	RW		

If *S Ramp Enable* (02.006) = 0 linear ramps are used, but if *S Ramp Enable* (02.006) = 1 a limit is applied to the rate of change of acceleration to give S ramps. The S ramp function is disabled during deceleration when the standard ramp voltage controller is active. When the motor is accelerated again the acceleration rate used by the S ramp function is reset to zero and has to rise to the programmed acceleration level at the programmed rate of change (see *Max Rate Of Change Of Acceleration* (02.007) and *S Ramp Set-up Mode* (02.041)).

Parameter	02.007 *Max Rate Of Change Of Acceleration*		
Short description	Defines the maximum rate of change of acceleration used by the ramp system		
Mode	RFC-A		
Minimum	0.0	Maximum	300.0
Default	3.1	Units	s²/100Hz
Type	32 Bit User Save	Update Rate	Background read
Display Format	Standard	Decimal Places	1
Coding	RW		

A rate of change of acceleration can be applied such that the acceleration rate changes linearly between 0 and the value in *Max Rate Of Change Of Acceleration* (02.007) during acceleration, and between *Max Rate Of Change Of Acceleration* (02.007) and 0 during deceleration. If *S Ramp Set-up Mode* (02.041) = 0 then the maximum rate of change of acceleration in both directions, accelerating away from or towards zero, is defined by *Max Rate Of Change Of Acceleration* (02.007).

The general equations are given below for a linear ramp and S ramp where
Δw is the required change of frequency or speed
a_{Max} is the maximum allowed acceleration in units of frequency/s or speed/s
J_{Max} is the maximum rate of change of acceleration (i.e. jerk) in units of frequency/s^2 or speed/s^2

The time for a linear ramp to give a change of frequency or speed Δw is

$T_{Linear} = \Delta w / a_{Max}$

If an S ramp is used w_B is the change of frequency or speed as the acceleration changes from zero to aMax, i.e. the S shaped part of the frequency or speed change.

$w_B = a_{Max}^2 / 2J_{Max}$

If the required frequency or speed change is less than 2wB, i.e. $\Delta w < 2wB$, then the acceleration never reaches its limit and the ramp does not contain a linear ramp section and the time for the ramp is given by

$T_{SRamp1} = 2 \sqrt{(\Delta w / J_{Max})}$

Otherwise

$T_{SRamp2} = (\Delta w / a_{Max}) + (a_{Max} / J_{Max})$

The following is an example based on the default parameter values for Open-loop mode. The diagram below shows a change of frequency from 0Hz to 50Hz with the ramp rate set to 5.0s/100Hz and *Max Rate Of Change Of Acceleration* (02.007) set to its default value of 3.1s^2/100Hz.

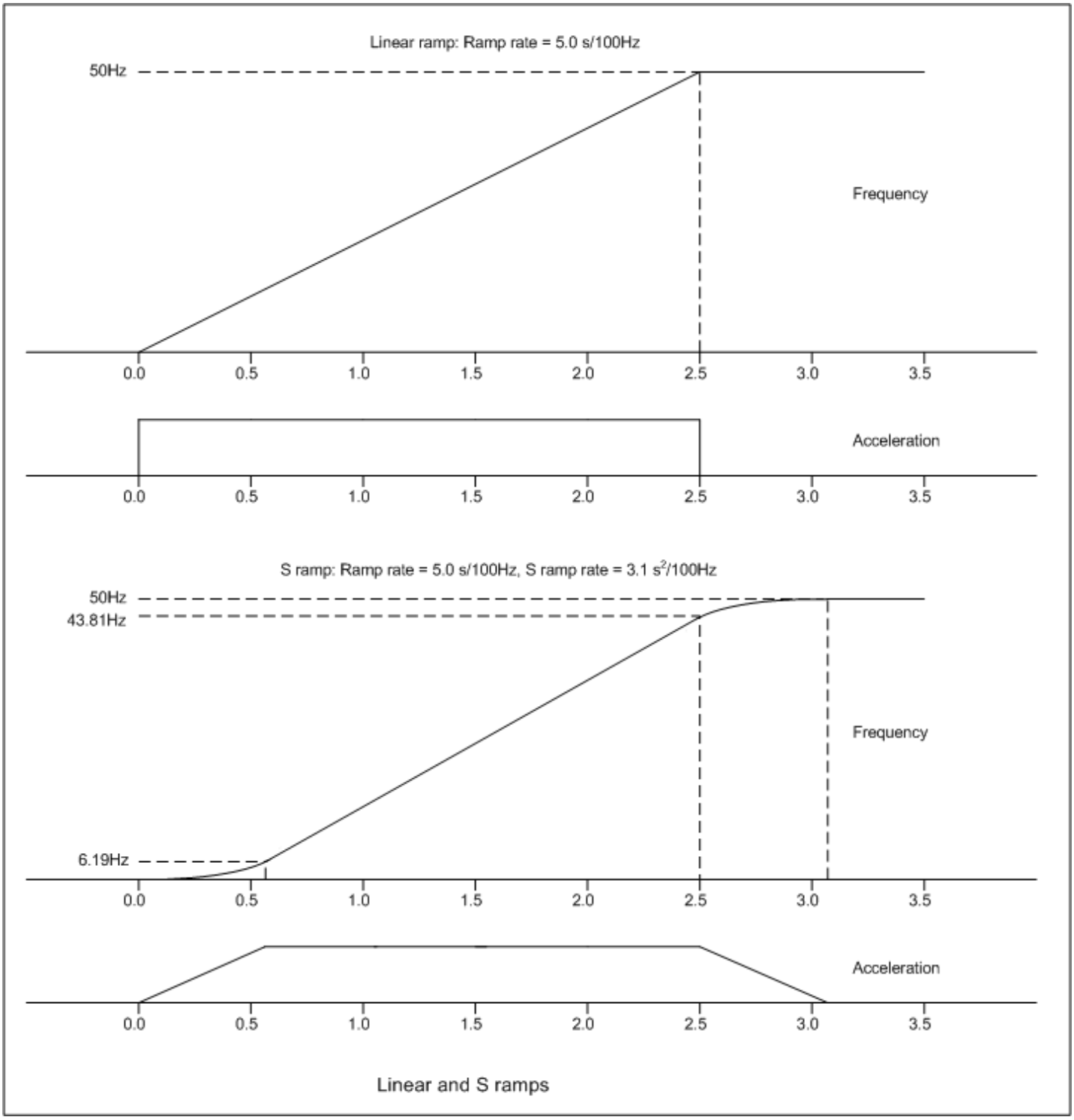

The required change of frequency Δw = 50Hz. The acceleration and jerk are converted from the parameter values as follows:

a_{Max} = 100 / ramp rate = 20.0Hz/s

J_{Max} = 100 / *Max Rate Of Change Of Acceleration* (02.007) = 32.3Hz/s^2

The linear ramp time $T_{Linear} = \Delta w \times a_{Max}$ = 50.0 / 20.0 = 2.5s

The frequency change for the acceleration to reach its limit $w_B = a_{Max}^2 / 2J_{Max} = 20.0^2 / (2 \times 32.3) = 6.19$Hz

The required frequency change for Δw = 50Hz and this is greater than $2w_B$, i.e. Δw > 2 x 6.19Hz. Therefore the time for the ramp

$T_{SRamp2} = (\Delta w / a_{Max}) + (a_{Max} / J_{Max})$ = (50.0 / 20.0) + (20.0 / 32.3) = 2.5 + 0.62 = 3.12s

Note that the default value of *Max Rate Of Change Of Acceleration* (02.007) has been chosen so that when it is combined with the default acceleration rate, each of the S sections of the ramp is 20% of the overall time for the frequency change, i.e. 0.62/3.12 x 100% = 20%. This is the same as if *S Ramp Set-up Mode* (02.041) = 2 and *S Ramp Percentage* (02.040) = 20% (see parameter *S Ramp Set-up Mode* (02.041) for alternative methods of setting up the S ramp function).

If the required change of frequency had been 5.0Hz, i.e. less than 2 x wB, then the alternative equation should be used:

$T_{SRamp1} = 2 \sqrt{(\Delta w / J_{Max})} = 2 \sqrt{(5.0 / 32.3)} = 0.78s$

For RFC-A mode the general equations are used in the same way as for Open-loop mode. The required values are calculated as follows:
Δw = 1000 / ramp rate
a_{Max} = 1000 / ramp rate
J_{Max} = 1000 / *Max Rate Of Change Of Acceleration* (02.007)

Parameter	**02.008** ***Standard Ramp Voltage***		
Short description	Defines the standard ramp voltage used by the ramp system		
Mode	RFC-A		
Minimum	−VM_DC_VOLTAGE_SET	Maximum	VM_DC_VOLTAGE_SET
Default	See exceptions below	Units	V
Type	16 Bit User Save	Update Rate	Background read
Display Format	Standard	Decimal Places	0
Coding	RW, VM, RA		

Voltage	***Region***	***Default Value***
110V	All	375
200V	All	375
400V	50Hz	750
400V	60Hz	775
575V	All	895
690V	All	1075

See *Ramp Mode Select* (02.004).

Parameter	**02.009** ***Deceleration Fail Detection Disable***		
Short description	Set to 1 to disable the deceleration fail detection function		
Mode	RFC-A		
Minimum	0	Maximum	1
Default	0	Units	
Type	1 Bit User Save	Update Rate	Background read
Display Format	Standard	Decimal Places	0
Coding	RW		

In the following circumstances it is possible that the motor may not decelerated or even accelerate.

1. When standard ramp is selected with a high inductance supply it is possible for the d.c. bus voltage to rise as the motor speed approaches zero, and so the motor will continue to rotate slowly and not stop.
2. An overhauling load can cause the motor to accelerate.

It can be a problem if the drive state is changed to the "Decelerating" state and the motor does not stop. If *Deceleration Fail Detection Disable* (02.009) is at its default value of 0, the motor frequency or speed is monitored in the "Decelerating" state, and if this does not fall over a period of 10s the ramp output is forced to zero and the drive state is changed to "Stop" or "Inhibit" as appropriate.

If *Deceleration Fail Detection Disable* (02.009) = 1 this feature is disabled. This can be used in the following circumstances to prevent the system state from changing from the "Decelerating" state before the motor has stopped:

1. If S ramps are being used with long ramp rates, and the motor is still accelerating when the drive is changed to the "Decelerating" state because the run command is removed, then the ramp output may increase further before falling again towards zero.
2. The speed may appear not to reduce when very long ramp rates are used.

Parameter	**02.010** ***Acceleration Rate Selector***		
Short description	Defines which acceleration rate is used by the ramp system		
Mode	RFC-A		
Minimum	0	Maximum	9
Default	0	Units	
Type	8 Bit User Save	Update Rate	16ms
Display Format	Standard	Decimal Places	0
Coding	RW		

The *Acceleration Rate Selector* (02.010) is used to either select an acceleration rate directly or to define the method used to select an acceleration rate. If 1 ≤ *Acceleration Rate Selector* (02.010) ≤ 8 the acceleration rate is selected directly, i.e. 1 selects *Acceleration Rate 1* (02.011), 2 selects *Acceleration Rate 2* (02.012), etc. If *Acceleration Rate Selector* (02.010) = 0 the acceleration rate is selected with the acceleration rate select bits as shown in the table below.

Acceleration Rate Select Bit 2 (02.034)	*Acceleration Rate Select Bit 1* (02.033)	*Acceleration Rate Select Bit 0* (02.032)	Acceleration rate selected
0	0	0	*Acceleration Rate 1* (02.011)
0	0	1	*Acceleration Rate 2* (02.012)
0	1	0	*Acceleration Rate 3* (02.013)
0	1	1	*Acceleration Rate 4* (02.014)
1	0	0	*Acceleration Rate 5* (02.015)
1	0	1	*Acceleration Rate 6* (02.016)
1	1	0	*Acceleration Rate 7* (02.017)
1	1	1	*Acceleration Rate 8* (02.018)

If *Acceleration Rate Selector* (02.010) = 9 the acceleration rate is selected based on the value of *Preset Selected Indicator* (01.050), i.e. 1 selects *Acceleration Rate 1* (02.011), 2 selects *Acceleration Rate 2* (02.012), etc.

Parameter	**02.011** ***Acceleration Rate 1***		
Short description	Defines the acceleration rate present in acceleration rate 1		
Mode	RFC-A		
Minimum	−VM_ACCEL_RATE	Maximum	VM_ACCEL_RATE
Default	5.0	Units	s
Type	32 Bit User Save	Update Rate	16ms
Display Format	Standard	Decimal Places	1
Coding	RW, VM		

See *Ramp Rate Units* (02.039) for the definition of Ramp rate frequency.

Acceleration Rate 1 (02.011) - *Acceleration Rate 8* (02.018) can be selected to define the linear ramp rate. The acceleration rate applies when the frequency is changing away from zero.

Selecting a ramp rate that has been set to zero in Asynchronous mode disables the ramp system so that the *Post Ramp Reference* (02.001) follows the *Pre-ramp Reference* (01.003) without any delay for acceleration or deceleration. It should be noted that this also disables the standard ramp d.c. link voltage controller and the frequency based current limits.

Parameter	**02.012** ***Acceleration Rate 2***		
Short description	Defines the acceleration rate present in acceleration rate 2		
Mode	RFC-A		
Minimum	−VM_ACCEL_RATE	Maximum	VM_ACCEL_RATE
Default	5.0	Units	s
Type	32 Bit User Save	Update Rate	16ms
Display Format	Standard	Decimal Places	1
Coding	RW, VM		

See *Acceleration Rate 1* (02.011).

Parameter	**02.013** ***Acceleration Rate 3***		
Short description	Defines the acceleration rate present in acceleration rate 3		
Mode	RFC-A		
Minimum	−VM_ACCEL_RATE	Maximum	VM_ACCEL_RATE
Default	5.0	Units	s
Type	32 Bit User Save	Update Rate	16ms
Display Format	Standard	Decimal Places	1
Coding	RW, VM		

See *Acceleration Rate 1* (02.011).

Parameter	**02.014** ***Acceleration Rate 4***		
Short description	Defines the acceleration rate present in acceleration rate 4		
Mode	RFC-A		
Minimum	−VM_ACCEL_RATE	Maximum	VM_ACCEL_RATE
Default	5.0	Units	s
Type	32 Bit User Save	Update Rate	16ms
Display Format	Standard	Decimal Places	1
Coding	RW, VM		

See *Acceleration Rate 1* (02.011).

Parameter	02.015 *Acceleration Rate 5*		
Short description	Defines the acceleration rate present in acceleration rate 5		
Mode	RFC-A		
Minimum	−VM_ACCEL_RATE	Maximum	VM_ACCEL_RATE
Default	5.0	Units	s
Type	32 Bit User Save	Update Rate	16ms
Display Format	Standard	Decimal Places	1
Coding	RW, VM		

See *Acceleration Rate 1* (02.011).

Parameter	02.016 *Acceleration Rate 6*		
Short description	Defines the acceleration rate present in acceleration rate 6		
Mode	RFC-A		
Minimum	−VM_ACCEL_RATE	Maximum	VM_ACCEL_RATE
Default	5.0	Units	s
Type	32 Bit User Save	Update Rate	16ms
Display Format	Standard	Decimal Places	1
Coding	RW, VM		

See *Acceleration Rate 1* (02.011).

Parameter	02.017 *Acceleration Rate 7*		
Short description	Defines the acceleration rate present in acceleration rate 7		
Mode	RFC-A		
Minimum	−VM_ACCEL_RATE	Maximum	VM_ACCEL_RATE
Default	5.0	Units	s
Type	32 Bit User Save	Update Rate	16ms
Display Format	Standard	Decimal Places	1
Coding	RW, VM		

See *Acceleration Rate 1* (02.011).

Parameter	02.018 *Acceleration Rate 8*		
Short description	Defines the acceleration rate present in acceleration rate 8		
Mode	RFC-A		
Minimum	−VM_ACCEL_RATE	Maximum	VM_ACCEL_RATE
Default	5.0	Units	s
Type	32 Bit User Save	Update Rate	16ms
Display Format	Standard	Decimal Places	1
Coding	RW, VM		

See *Acceleration Rate 1* (02.011).

Parameter	02.019 *Jog Acceleration Rate*		
Short description	Defines the acceleration rate present when the jog function is selected		
Mode	RFC-A		
Minimum	−VM_ACCEL_RATE	Maximum	VM_ACCEL_RATE
Default	0.2	Units	s
Type	32 Bit User Save	Update Rate	Background read
Display Format	Standard	Decimal Places	1
Coding	RW, VM		

See *Ramp Rate Units* (02.039) for the definition of Ramp rate frequency.

The *Jog Acceleration Rate* (02.019) is selected when *Jog Select* (01.013) is active and when the frequency is changing away from zero in either direction.

Parameter	02.020 *Deceleration Rate Selector*		
Short description	Defines which deceleration rate is used by the ramp system		
Mode	RFC-A		
Minimum	0	Maximum	9
Default	0	Units	
Type	8 Bit User Save	Update Rate	16ms
Display Format	Standard	Decimal Places	0
Coding	RW		

The *Deceleration Rate Selector* (02.020) operates in the same way as the *Acceleration Rate Selector* (02.010). If *Deceleration Rate Selector* (02.020) = 0 the deceleration rate is selected with the deceleration rate select bits as shown in the table below.

Deceleration Rate Select Bit 2 (02.037)	*Deceleration Rate Select Bit 1* (02.036)	*Deceleration Rate Select Bit 0* (02.035)	Deceleration rate selected
0	0	0	*Deceleration Rate 1* (02.021)
0	0	1	*Deceleration Rate 2* (02.022)
0	1	0	*Deceleration Rate 3* (02.023)
0	1	1	*Deceleration Rate 4* (02.024)
1	0	0	*Deceleration Rate 5* (02.025)
1	0	1	*Deceleration Rate 6* (02.026)
1	1	0	*Deceleration Rate 7* (02.027)
1	1	1	*Deceleration Rate 8* (02.028)

Parameter	02.021 *Deceleration Rate 1*		
Short description	Defines the deceleration rate present in deceleration rate 1		
Mode	RFC-A		
Minimum	−VM_ACCEL_RATE	Maximum	VM_ACCEL_RATE
Default	10.0	Units	s
Type	32 Bit User Save	Update Rate	16ms
Display Format	Standard	Decimal Places	1
Coding	RW, VM		

See *Ramp Rate Units* (02.039) for the definition of Ramp rate frequency

Deceleration Rate 1 (02.021) - *Deceleration Rate 8* (02.028) can be selected to define the linear ramp rate. The deceleration rate applies when the frequency is changing towards zero.

Selecting a ramp rate that has been set to zero in Asynchronous mode disables the ramp system so that the *Post Ramp Reference* (02.001) follows the *Pre-ramp Reference* (01.003) without any delay for acceleration or deceleration. It should be noted that this also disables the standard ramp d.c. link voltage controller and the frequency based current limits.

Parameter	02.022 *Deceleration Rate 2*		
Short description	Defines the deceleration rate present in deceleration rate 2		
Mode	RFC-A		
Minimum	−VM_ACCEL_RATE	Maximum	VM_ACCEL_RATE
Default	10.0	Units	s
Type	32 Bit User Save	Update Rate	16ms
Display Format	Standard	Decimal Places	1
Coding	RW, VM		

See *Deceleration Rate 1* (02.021).

Parameter	02.023 *Deceleration Rate 3*		
Short description	Defines the deceleration rate present in deceleration rate 3		
Mode	RFC-A		
Minimum	−VM_ACCEL_RATE	Maximum	VM_ACCEL_RATE
Default	10.0	Units	s
Type	32 Bit User Save	Update Rate	16ms
Display Format	Standard	Decimal Places	1
Coding	RW, VM		

See *Deceleration Rate 1* (02.021).

Parameter	02.024 *Deceleration Rate 4*		
Short description	Defines the deceleration rate present in deceleration rate 4		
Mode	RFC-A		
Minimum	−VM_ACCEL_RATE	Maximum	VM_ACCEL_RATE
Default	10.0	Units	s
Type	32 Bit User Save	Update Rate	16ms
Display Format	Standard	Decimal Places	1
Coding	RW, VM		

See *Deceleration Rate 1* (02.021).

Parameter	02.025 *Deceleration Rate 5*		
Short description	Defines the deceleration rate present in deceleration rate 5		
Mode	RFC-A		
Minimum	−VM_ACCEL_RATE	Maximum	VM_ACCEL_RATE
Default	10.0	Units	s
Type	32 Bit User Save	Update Rate	16ms
Display Format	Standard	Decimal Places	1
Coding	RW, VM		

See *Deceleration Rate 1* (02.021).

Parameter	02.026 *Deceleration Rate 6*		
Short description	Defines the deceleration rate present in deceleration rate 6		
Mode	RFC-A		
Minimum	−VM_ACCEL_RATE	Maximum	VM_ACCEL_RATE
Default	10.0	Units	s
Type	32 Bit User Save	Update Rate	16ms
Display Format	Standard	Decimal Places	1
Coding	RW, VM		

See *Deceleration Rate 1* (02.021).

Parameter	02.027 *Deceleration Rate 7*		
Short description	Defines the deceleration rate present in deceleration rate 7		
Mode	RFC-A		
Minimum	−VM_ACCEL_RATE	Maximum	VM_ACCEL_RATE
Default	10.0	Units	s
Type	32 Bit User Save	Update Rate	16ms
Display Format	Standard	Decimal Places	1
Coding	RW, VM		

See *Deceleration Rate 1* (02.021).

Parameter	02.028 *Deceleration Rate 8*		
Short description	Defines the deceleration rate present in deceleration rate 8		
Mode	RFC-A		
Minimum	−VM_ACCEL_RATE	Maximum	VM_ACCEL_RATE
Default	10.0	Units	s
Type	32 Bit User Save	Update Rate	16ms
Display Format	Standard	Decimal Places	1
Coding	RW, VM		

See *Deceleration Rate 1* (02.021).

Parameter	02.029 *Jog Deceleration Rate*		
Short description	Defines the deceleration rate present when the jog function is selected		
Mode	RFC-A		
Minimum	−VM_ACCEL_RATE	Maximum	VM_ACCEL_RATE
Default	0.2	Units	s
Type	32 Bit User Save	Update Rate	Background read
Display Format	Standard	Decimal Places	1
Coding	RW, VM		

See *Ramp Rate Units* (02.039) for the definition of Ramp rate frequency.

The *Jog Deceleration Rate* (02.029) is selected when *Jog Select* (01.013) is active and when the frequency is changing towards zero in either direction.

Parameter	02.030 *Acceleration Rate Selected*		
Short description	Indicates which acceleration rate is selected		
Mode	RFC-A		
Minimum	0	Maximum	8
Default		Units	
Type	8 Bit Volatile	Update Rate	16ms
Display Format	Standard	Decimal Places	0
Coding	RO, ND, NC, PT		

Acceleration Rate Selected (02.030) shows a value between 1 and 8 that corresponds to *Acceleration Rate 1* (02.011) to *Acceleration Rate 8* (02.018) indicating which of these acceleration rates is actually being used.

Deceleration Rate Selected (02.031) shows a value between 1 and 8 that corresponds to *Deceleration Rate 1* (02.021) to *Deceleration Rate 8*

(02.028) indicating which of these deceleration rates is actually being used.

Parameter	02.031 *Deceleration Rate Selected*		
Short description	Indicates which deceleration rate is selected		
Mode	RFC-A		
Minimum	0	Maximum	8
Default		Units	
Type	8 Bit Volatile	Update Rate	16ms
Display Format	Standard	Decimal Places	0
Coding	RO, ND, NC, PT		

See *Acceleration Rate Selected* (02.030).

Parameter	02.032 *Acceleration Rate Select Bit 0*		
Short description	Defines which acceleration rate is used if acceleration rate selector = 0		
Mode	RFC-A		
Minimum	0	Maximum	1
Default	0	Units	
Type	1 Bit Volatile	Update Rate	16ms
Display Format	Standard	Decimal Places	0
Coding	RW, NC		

See *Acceleration Rate Selector* (02.010).

Parameter	02.033 *Acceleration Rate Select Bit 1*		
Short description	Defines which acceleration rate is used if acceleration rate selector = 0		
Mode	RFC-A		
Minimum	0	Maximum	1
Default	0	Units	
Type	1 Bit Volatile	Update Rate	16ms
Display Format	Standard	Decimal Places	0
Coding	RW, NC		

See *Acceleration Rate Selector* (02.010).

Parameter	02.034 *Acceleration Rate Select Bit 2*		
Short description	Defines which acceleration rate is used if acceleration rate selector = 0		
Mode	RFC-A		
Minimum	0	Maximum	1
Default	0	Units	
Type	1 Bit Volatile	Update Rate	16ms
Display Format	Standard	Decimal Places	0
Coding	RW, NC		

See *Acceleration Rate Selector* (02.010).

Parameter	02.035 *Deceleration Rate Select Bit 0*		
Short description	Defines which deceleration rate is used if deceleration rate selector = 0		
Mode	RFC-A		
Minimum	0	Maximum	1
Default	0	Units	
Type	1 Bit Volatile	Update Rate	16ms
Display Format	Standard	Decimal Places	0
Coding	RW, NC		

See *Deceleration Rate Selector* (02.020).

Parameter	02.036 *Deceleration Rate Select Bit 1*		
Short description	Defines which deceleration rate is used if deceleration rate selector = 0		
Mode	RFC-A		
Minimum	0	Maximum	1
Default	0	Units	
Type	1 Bit Volatile	Update Rate	16ms
Display Format	Standard	Decimal Places	0
Coding	RW, NC		

See *Deceleration Rate Selector* (02.020).

Parameter	02.037 *Deceleration Rate Select Bit 2*		
Short description	Defines which deceleration rate is used if deceleration rate selector = 0		
Mode	RFC-A		
Minimum	0	Maximum	1
Default	0	Units	
Type	1 Bit Volatile	Update Rate	16ms
Display Format	Standard	Decimal Places	0
Coding	RW, NC		

See *Deceleration Rate Selector* (02.020).

Parameter	02.038 *Inertia Compensation Torque*		
Short description	Displays the torque as a percentage of rated torque		
Mode	RFC-A		
Minimum	-1000.0	Maximum	1000.0
Default		Units	%
Type	16 Bit Volatile	Update Rate	16ms
Display Format	Standard	Decimal Places	1
Coding	RO, ND, NC, PT		

The *Motor and Load Inertia* (03.018), *Torque Per Amp* (05.032) and the rate of change of the *Post Ramp Reference* (02.001) are used to produce a torque feed-forwards value that should accelerate and decelerate the load at the required rate. This value can be used as a feed-forwards term that is added to the speed controller output if *Inertia Compensation Enable* (04.022) = 1. *Inertia Compensation Torque* (02.038) gives the torque as a percentage of rated torque.

Parameter	02.039 *Ramp Rate Units*		
Short description	Defines the units used by the ramp system		
Mode	RFC-A		
Minimum	0	Maximum	2
Default	0	Units	
Type	8 Bit User Save	Update Rate	Background read
Display Format	Standard	Decimal Places	0
Coding	RW		

The ramp rate parameters (*Acceleration Rate 1* (02.011) - *Acceleration Rate 8* (02.018), *Jog Acceleration Rate* (02.019), *Deceleration Rate 1* (02.021) - *Deceleration Rate 8* (02.028) and *Jog Deceleration Rate* (02.029)) are specified in s / *Ramp rate frequency*. *Ramp rate frequency* is selected with Ramp Rate Units (02.039) as defined in the table below.

***Ramp Rate Units* (02.039)**	**Ramp rate frequency**
0	Seconds per 100Hz
1	Seconds per Maximum Frequency
2	Seconds per 1000Hz

Maximum frequency is defined by *Maximum Speed* (01.006) if *Select Motor 2 Parameters* (11.045) = 0, or *M2 Maximum Speed* (21.001) if *Select Motor 2 Parameters* (11.045) = 1.

Parameter	02.040 *S Ramp Percentage*		
Short description	Defines the profile of the S ramp system as a percentage		
Mode	RFC-A		
Minimum	0.0	Maximum	50.0
Default	0.0	Units	%
Type	16 Bit User Save	Update Rate	Background read
Display Format	Standard	Decimal Places	1
Coding	RW		

If *S Ramp Set-up Mode* (02.041) = 1 the percentage of the ramp to Maximum frequency that includes half the S ramp profile can be specified with *S Ramp Percentage* (02.040) as shown in the diagram below. Maximum frequency is defined by *Maximum Speed* (01.006) if *Select Motor 2 Parameters* (11.045) = 0, or *M2 Maximum Speed* (21.001) if *Select Motor 2 Parameters* (11.045) = 1. It should be noted that the time to ramp to Maximum frequency does not change as *S Ramp Percentage* (02.040) is changed, but the maximum acceleration rate in the centre of the profile increases.

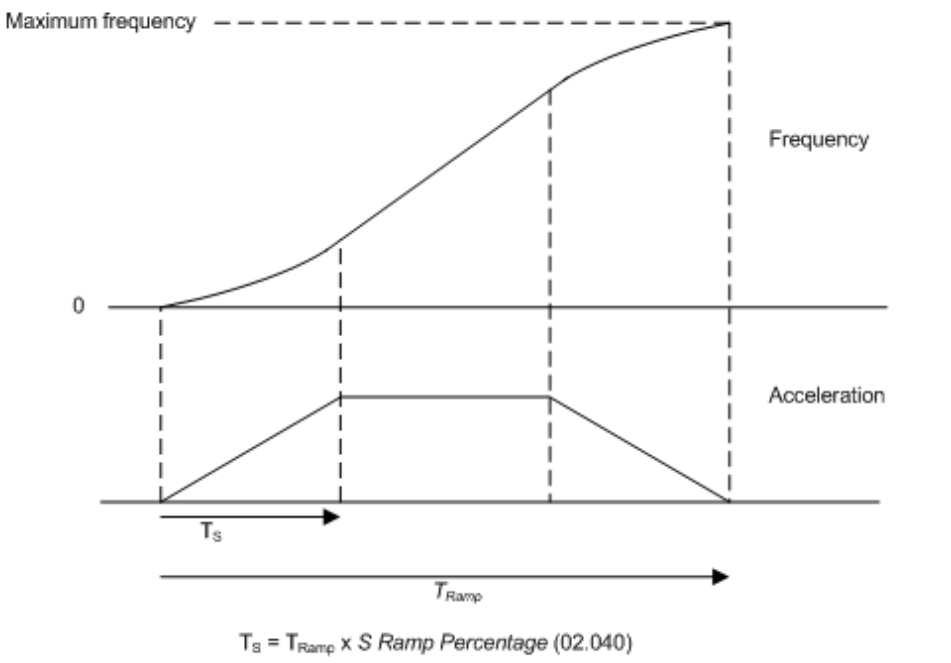

Fig.2.5: S ramp set-up using percentage

Parameter	**02.041** ***S Ramp Set-up Mode***		
Short description	Defines the mode used by the S ramp system		
Mode	RFC-A		
Minimum	0	Maximum	2
Default	0	Units	
Type	8 Bit User Save	Update Rate	Background read
Display Format	Standard	Decimal Places	0
Coding	RW		

S Ramp Set-up Mode (02.041) defines the method used to set up the S ramp function.

0: Single maximum rate of change of acceleration
The maximum rate of change of acceleration in either direction, when the frequency is changing away from or towards zero, is defined by *Max Rate Of Change Of Acceleration* (02.007).

1: S ramp percentage
A single maximum rate of change of acceleration is used in either direction, when the frequency is changing away from or towards zero, but this is specified as the percentage of the ramp from zero to Maximum frequency which is covered by the S shaped profile. See *S Ramp Percentage* (02.040).

2: Four independent maximum rate of change of acceleration values
The maximum rate of change of acceleration can be specified as four independent values. See *Max Rate Of Change Of Acceleration* (02.007).

Parameter	**02.042** ***Maximum Rate Of Change Of Acceleration 1***		
Short description	Defines the 1st maximum rate of change of acceleration used by the S ramp system		
Mode	RFC-A		
Minimum	0.0	Maximum	300.0
Default	0.0	Units	s^2/100Hz
Type	32 Bit User Save	Update Rate	Background read
Display Format	Standard	Decimal Places	1
Coding	RW		

If *S Ramp Set-up Mode* (02.041) = 2 it is possible to set up four independent maximum rate of change of acceleration values as shown in the diagram below. The values from 1 to 4 correspond to *Maximum Rate Of Change Of Acceleration 1* (02.042) to *Maximum Rate Of Change Of Acceleration 4* (02.045) respectively.

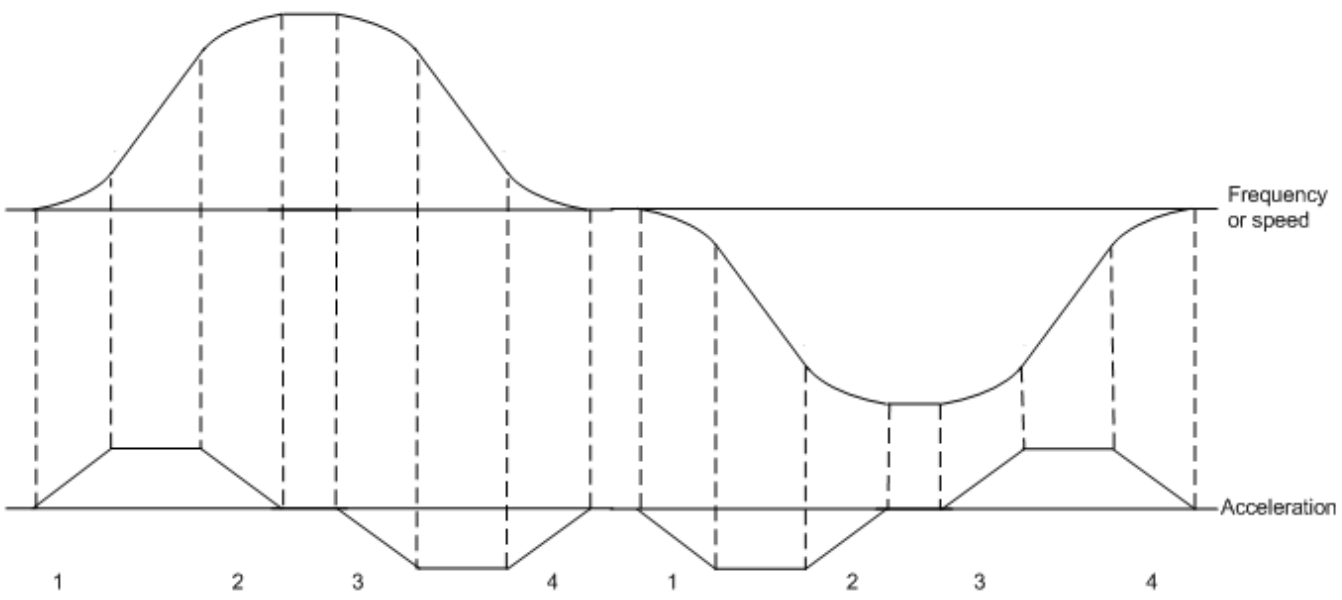

Fig.2.6: S ramp set-up with four maximum rate of change of acceleration values

Parameter	02.043 *Maximum Rate Of Change Of Acceleration 2*		
Short description	Defines the 2nd maximum rate of change of acceleration used by the S ramp system		
Mode	RFC-A		
Minimum	0.0	Maximum	300.0
Default	0.0	Units	s²/100Hz
Type	32 Bit User Save	Update Rate	Background read
Display Format	Standard	Decimal Places	1
Coding	RW		

See *Maximum Rate Of Change Of Acceleration 1* (02.042).

Parameter	02.044 *Maximum Rate Of Change Of Acceleration 3*		
Short description	Defines the 3rd maximum rate of change of acceleration used by the S ramp system		
Mode	RFC-A		
Minimum	0.0	Maximum	300.0
Default	0.0	Units	s²/100Hz
Type	32 Bit User Save	Update Rate	Background read
Display Format	Standard	Decimal Places	1
Coding	RW		

See *Maximum Rate Of Change Of Acceleration 1* (02.042).

Parameter	02.045 *Maximum Rate Of Change Of Acceleration 4*		
Short description	Defines the 4th maximum rate of change of acceleration used by the S ramp system		
Mode	RFC-A		
Minimum	0.0	Maximum	300.0
Default	0.0	Units	s²/100Hz
Type	32 Bit User Save	Update Rate	Background read
Display Format	Standard	Decimal Places	1
Coding	RW		

See *Maximum Rate Of Change Of Acceleration 1* (02.042).

Menu 3 Single Line Descriptions − *Frequency and Speed Feedback*

Mode: RFC-A

Parameter		Range	Default	Type					
03.001	Final Demand Reference	±VM_FREQ Hz		RO	Num	ND	NC	PT	FI
03.002	Estimated Frequency	±VM_FREQ Hz		RO	Num	ND	NC	PT	FI
03.003	Frequency Error	±VM_FREQ Hz		RO	Num	ND	NC	PT	FI
03.004	Frequency Controller Output	±VM_TORQUE_CURRENT %		RO	Num	ND	NC	PT	FI
03.005	Zero Frequency Threshold	0.00 to 20.00 Hz	2.00 Hz	RW	Num				US
03.006	At Frequency Lower Limit	0.00 to 550.00 Hz	1.00 Hz	RW	Num				US
03.007	At Frequency Upper Limit	0.00 to 550.00 Hz	1.00 Hz	RW	Num				US
03.008	Over Frequency Threshold	0.00 to 550.00 Hz	0.00 Hz	RW	Num				US
03.009	Absolute At Frequency Select	Off (0) or On (1)	Off (0)	RW	Bit				US
03.010	Frequency Controller Proportional Gain Kp1	0.000 to 200.000 s/rad	0.100 s/rad	RW	Num				US
03.011	Frequency Controller Integral Gain Ki1	0.00 to 655.35 s²/rad	0.10 s²/rad	RW	Num				US
03.012	Frequency Controller Differential Feedback Gain Kd1	0.00000 to 0.65535 1/rad	0.00000 1/rad	RW	Num				US
03.013	Frequency Controller Proportional Gain Kp2	0.000 to 200.000 s/rad	0.100 s/rad	RW	Num				US
03.014	Frequency Controller Integral Gain Ki2	0.00 to 655.35 s²/rad	0.10 s²/rad	RW	Num				US
03.015	Frequency Controller Differential Feedback Gain Kd2	0.00000 to 0.65535 1/rad	0.00000 1/rad	RW	Num				US
03.016	Frequency Controller Gain Select	0 to 2	0	RW	Num				US
03.017	Gain Change Threshold	0.00 to 550.00 Hz	0.00 Hz	RW	Num				US
03.018	Motor and Load Inertia	0.00 to 1000.00 kgm²	0.00 kgm²	RW	Num				US
03.022	Hard Frequency Reference	±VM_SPEED_FREQ_REF Hz	0.00 Hz	RW	Num				US
03.023	Hard Frequency Reference Select	Off (0) or On (1)	Off (0)	RW	Bit				US
03.029	Position	0 to 65535		RO	Num	ND	NC	PT	FI
03.032	Position Counter Reset	Off (0) or On (1)	Off (0)	RW	Bit		NC		
03.035	Position Scaling Numerator	0.000 to 1.000	1.000	RW	Num				US
03.036	Position Scaling Denominator	0.000 to 100.000	1.000	RW	Num				US
03.037	Frequency Output or PWM Output Scaling	0.000 to 4.000	1.000	RW	Num				US
03.038	Maximum Output Frequency	1 (0), 2 (1), 5 (2), 10 (3) kHz	5 (2) kHz	RW	Txt				US
03.042	Frequency Input High Precision	Off (0) or On (1)	Off (0)	RW	Bit				US
03.043	Maximum Reference Frequency	0.00 to 100.00 kHz	10.00 kHz	RW	Num				US
03.044	Frequency Reference Scaling	0.000 to 4.000	1.000	RW	Num				US
03.045	Frequency Reference	±100.00 %		RO	Num	ND	NC	PT	FI
03.047	Two Point Minimum Frequency	±100.00 %	-100.00 %	RW	Num				US
03.048	Drive Reference at Minimum Frequency	±100.00 %	-100.00 %	RW	Num				US
03.049	Two Point Maximum Frequency	0.00 to 100.00 %	100.00 %	RW	Num				US
03.050	Drive Reference at Maximum Frequency	0.00 to 100.00 %	100.00 %	RW	Num				US
03.072	Motor speed percent	±150.0 %		RO	Num	ND	NC	PT	FI
03.079	Sensorless Mode Filter	4 (0), 5 (1), 6 (2), 8 (3), 12 (4), 20 (5) ms	4 (0) ms	RW	Txt				US
03.080	Sensorless Position	0 to 65535		RO	Num	ND	NC	PT	
03.127	Frequency feedback	±VM_SPEED_FREQ_REF Hz		RO	Num	ND	NC	PT	
03.128	Revolution Counter	0 to 65535 Revs		RO	Num	ND	NC	PT	FI
03.134	Rotary Lines Per Revolution	512 (0), 1024 (1), 2048 (2), 4096 (3)	1024 (1)	RW	Txt				US
03.142	Encoder feedback filter	1 to 31 ms	3 ms	RW	Num				US
03.143	Maximum Frequency Feedback	±VM_SPEED_FREQ_REF Hz	50Hz: 50.00 Hz 60Hz: 60.00 Hz	RW	Num				US

RW	Read / Write	RO	Read-only	Bit	Bit parameter	Txt	Text string	Date	Date parameter	Time	Time parameter
Chr	Character parameter	Bin	Binary parameter	IP	IP address	Mac	MAC address	Ver	Version number	SMP	Slot, menu, parameter
Num	Number parameter	DE	Destination	ND	No default value	RA	Rating dependent	NC	Non-copyable	PT	Protected
FI	Filtered	US	User save	PS	Power-down save						

Menu 3 − *Frequency and Speed Feedback*

Mode: RFC-A

The drive controls asynchronous machines in closed closed loop speed and current control through the use of a speed estimator to determine the speed of the motor.

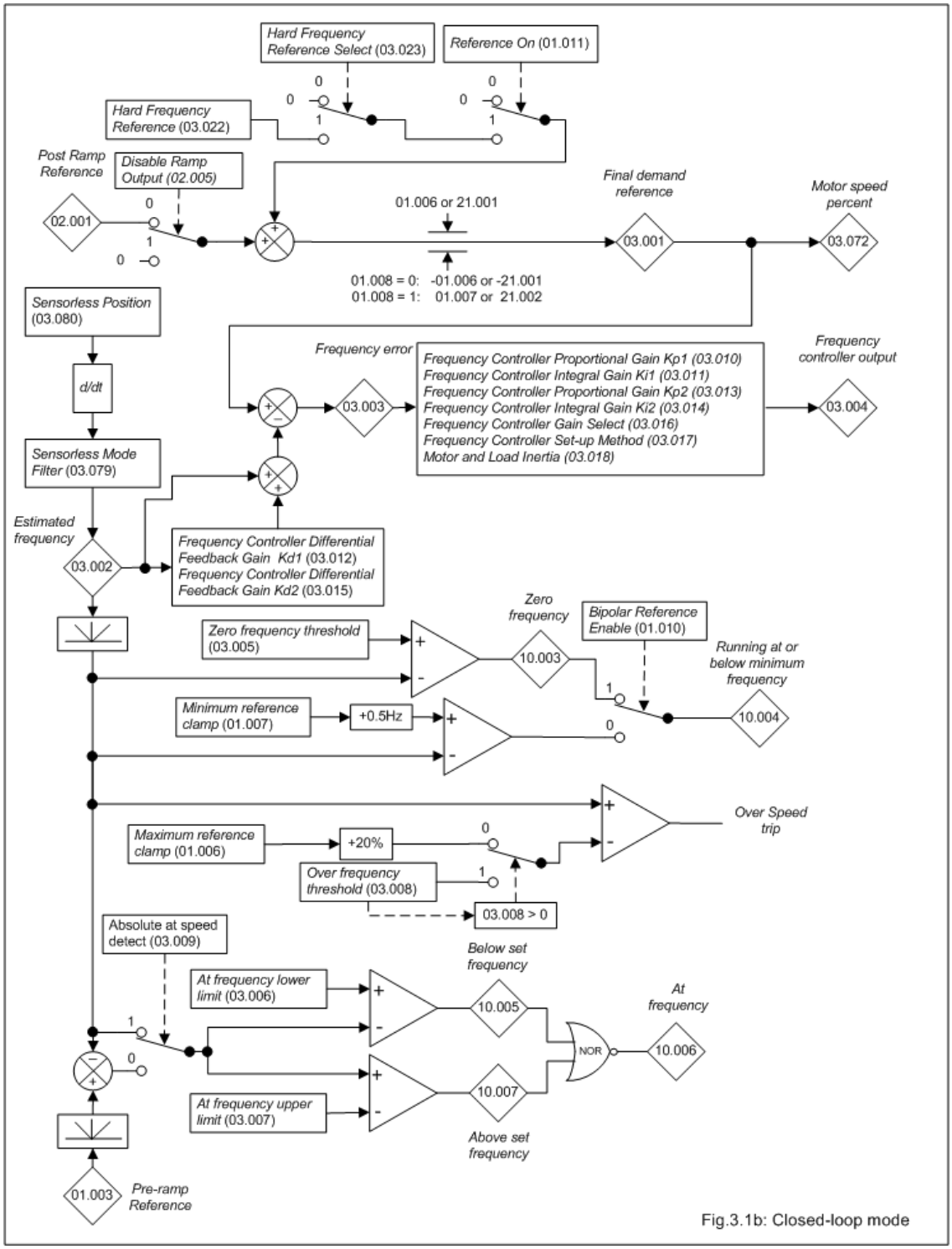

Fig.3.1b: Closed-loop mode

Parameter	03.001 *Final Demand Reference*		
Short description	Displays the final reference to the frequency controller		
Mode	RFC-A		
Minimum	−VM_FREQ	Maximum	VM_FREQ
Default		Units	Hz
Type	32 Bit Volatile	Update Rate	16ms
Display Format	Standard	Decimal Places	2
Coding	RO, FI, VM, ND, NC, PT		

Final Demand Reference (03.001) shows the reference at the input to the frequency controller, which is the sum of the *Post Ramp Reference* (02.001) if the ramp output is not disabled and the hard frequency reference (if enabled). If the drive is disabled *Final Demand Reference* (03.001) is 0.00.

Parameter	03.002 *Estimated Frequency*		
Short description	Displays the frequency feedback selected for the frequency controller		
Mode	RFC-A		
Minimum	−VM_FREQ	Maximum	VM_FREQ
Default		Units	Hz
Type	32 Bit Volatile	Update Rate	16ms
Display Format	Standard	Decimal Places	2
Coding	RO, FI, VM, ND, NC, PT		

Estimated Frequency (03.002) is the level of the frequency feedback selected for the frequency controller.

Parameter	03.003 *Frequency Error*		
Short description	Displays the error between the final frequency demand and the estimated frequency		
Mode	RFC-A		
Minimum	−VM_FREQ	Maximum	VM_FREQ
Default		Units	Hz
Type	32 Bit Volatile	Update Rate	16ms
Display Format	Standard	Decimal Places	2
Coding	RO, FI, VM, ND, NC, PT		

The frequency error is the difference between the final frequency demand and the estimated frequency and does not include the effect of the differential term in the frequency controller feedback branch.

Parameter	03.004 *Frequency Controller Output*		
Short description	Displays the output of the frequency controller		
Mode	RFC-A		
Minimum	−VM_TORQUE_CURRENT	Maximum	VM_TORQUE_CURRENT
Default		Units	%
Type	16 Bit Volatile	Update Rate	16ms
Display Format	Standard	Decimal Places	1
Coding	RO, FI, VM, ND, NC, PT		

The output of the frequency regulator is a torque demand given as a percentage of rated motor torque. It should be noted that this will be modified to take into account the level of motor flux if field weakening is active before it is converted into the *Final Current Reference* (04.004).

Parameter	03.005 *Zero Frequency Threshold*		
Short description	Defines the threshold for detecting the zero frequency condition		
Mode	RFC-A		
Minimum	0.00	Maximum	20.00
Default	2.00	Units	Hz
Type	16 Bit User Save	Update Rate	Background read
Display Format	Standard	Decimal Places	2
Coding	RW, BU		

If the *Post Ramp Reference* (02.001) is at or below the level defined by this parameter in either direction *Zero Frequency* (10.003) = 1, otherwise *Zero Frequency* (10.003) = 0.

Parameter	03.006 *At Frequency Lower Limit*		
Short description	Defines the lower limit for detecting the at frequency condition		
Mode	RFC-A		
Minimum	0.00	Maximum	550.00
Default	1.00	Units	Hz
Type	32 Bit User Save	Update Rate	Background read
Display Format	Standard	Decimal Places	2
Coding	RW		

At Frequency (10.006) is set if the *Estimated Frequency* (03.002) is on the boundaries or within the at speed window. *Above Set Frequency* (10.007) and *Below Set Frequency* (10.005) are set if the feedback is above or below the window respectively.

If *Absolute At Frequency Select* (03.009) = 0 reference window mode is used.
The "at speed" condition is true if,

(|*Pre-ramp Reference* (01.003)| - *At Frequency Lower Limit* (03.006)) ≤ |*Estimated Frequency* (03.002)| ≤ (|*Pre-ramp Reference* (01.003)| + *At Frequency Upper Limit* (03.007))

(If the lower limit is less than zero then zero is used as the lower limit.)

If *Absolute At Frequency Select* (03.009) = 1 absolute window mode is used.
The "at speed" condition is true if,

At Frequency Lower Limit (03.006) ≤ |*Estimated Frequency* (03.002)| ≤ *At Frequency Upper Limit* (03.007)

Note: All flags are cleared if *Reference On* (01.011) is 0.

Parameter	03.007 *At Frequency Upper Limit*		
Short description	Defines the upper limit for detecting the at frequency condition		
Mode	RFC-A		
Minimum	0.00	Maximum	550.00
Default	1.00	Units	Hz
Type	32 Bit User Save	Update Rate	Background read
Display Format	Standard	Decimal Places	2
Coding	RW		

See *At Frequency Lower Limit* (03.006).

Parameter	03.008 *Over Frequency Threshold*		
Short description	Defines the threshold used to detect the over frequency condition		
Mode	RFC-A		
Minimum	0.00	Maximum	550.00
Default	0.00	Units	Hz
Type	32 Bit User Save	Update Rate	Background read
Display Format	Standard	Decimal Places	2
Coding	RW		

If *Over Frequency Threshold* (03.008) is set to a non-zero value it defines the over frequency threshold. If the *Estimated Frequency* (03.002) exceeds this threshold in either direction an *Over Speed* trip is produced. If *Over Frequency Threshold* (03.008) is set to 0.00 the threshold is 1.2 times the variable maximum for the references which is normally the value of *Maximum Speed* (01.006) or *M2 Maximum Speed* (21.001), but see VM_SPEED_FREQ_REF[MAX] for a full definition.

Parameter	**03.009** ***Absolute At Frequency Select***		
Short description	Set to 1 to select absolute at frequency		
Mode	RFC-A		
Minimum	0	Maximum	1
Default	0	Units	
Type	1 Bit User Save	Update Rate	Background read
Display Format	Standard	Decimal Places	0
Coding	RW		

See *At Frequency Lower Limit* (03.006).

Parameter	**03.010** ***Frequency Controller Proportional Gain Kp1***		
Short description	Defines the proportional gain for frequency controller Kp1		
Mode	RFC-A		
Minimum	0.000	Maximum	200.000
Default	0.100	Units	s/rad
Type	32 Bit User Save	Update Rate	Background
Display Format	Standard	Decimal Places	3
Coding	RW		

The diagram below shows a generalised representation of the frequency controller. The controller includes a feed forward proportional gain (Kp), a feed forward integral gain (Ki), and a differential feedback gain (Kd).

The drive holds two sets of these gains and either set may be selected for use by the frequency controller with *Frequency Controller Gain Select* (03.016). If *Frequency Controller Gain Select* (03.016) = 0, gains Kp1, Ki1 and Kd1 are used, and if *Frequency Controller Gain Select* (03.016) = 1, gains Kp2, Ki2 and Kd2 are used.

If *Frequency Controller Gain Select* (03.016) = 2, Kp1 etc are used while the modulus of the frequency demand is less than the value held by *Gain Change Threshold* (03.017), else Kp2 etc will be used.

If *Frequency Controller Gain Select* (03.016) is changed when the drive is enabled, the controller output is kept constant by modifying the level of the integral term accumulator so that the transient produced is minimised.

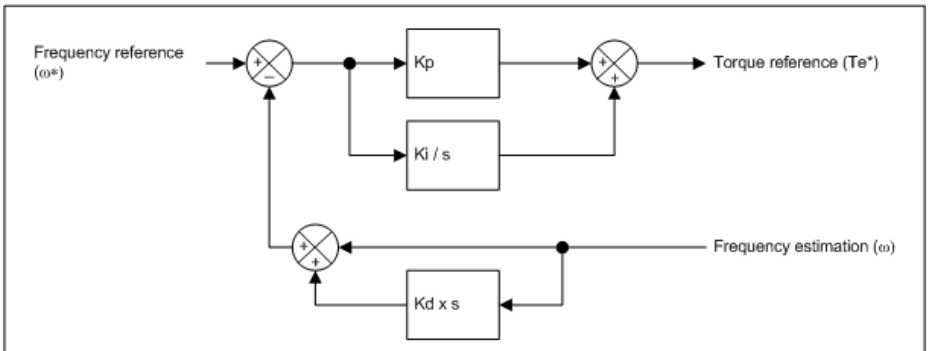

Fig.3.4: Frequency controller

Proportional gain (Kp)
If Kp is non-zero and Ki is zero the controller will only have a proportional term, and there must be a frequency error to produce a torque reference. Therefore as the motor load increases there will be a difference between the reference and actual frequencies. This effect, called regulation, depends on the level of the proportional gain, the higher the gain the smaller the frequency error for a given load. If the proportional gain is too high the closed-loop stability limit may be reached.

Integral gain (Ki)
The integral gain is provided to prevent frequency regulation. The error is accumulated over a period of time and used to produce the necessary torque reference without any frequency error. Increasing the integral gain reduces the time taken for the frequency to reach the correct level and increases the stiffness of the system, i.e. it reduces the positional displacement produced by applying a load torque to the motor. Unfortunately increasing the integral gain also reduces the system damping giving overshoot after a transient. For a given integral gain the damping can be improved by increasing the proportional gain. A compromise must be reached where the system response, stiffness and damping are all adequate for the application. The integral term is implemented in the form of ∑(Ki x error), and so the integral gain can be changed when the controller is active without causing large transients on the torque reference.

Differential gain (Kd)
The differential gain is provided in the feedback of the frequency controller to give additional damping. The differential term is implemented in a way that does not introduce excessive noise normally associated with this type of function. Increasing the differential term reduces the overshoot produced by under-damping, however for most applications the proportional and integral gains alone are sufficient.

It should be noted that the differential term is limited internally so that it is ineffective if frequency in Hz x Kd x Ki is greater than 170.

To analyse the performance of the frequency controller it may be represented as an s-domain model as shown below.

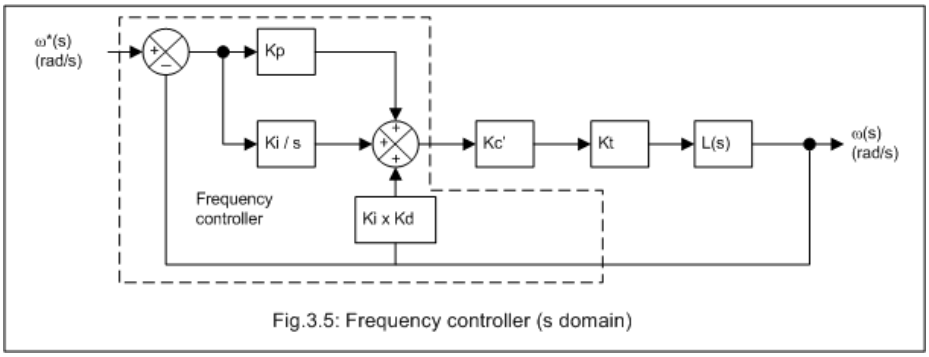

Fig.3.5: Frequency controller (s domain)

Kc' is the conversion between the frequency controller output and the torque producing current reference. A value of unity at the output of the frequency controller gives a torque producing current equal to Kc'. The drive automatically compensates the torque producing current reference for flux variations in field weakening, and so Kc' can be assumed to have a constant value even in field weakening. Kc' = *Full Scale Current Kc* (11.061) x 0.45.

Kt is the torque constant of the motor (i.e. torque in Nm per amp of torque producing current). For induction motors the value must be calculated from the motor parameters. In RFC-A mode this calculation is performed by the drive and the result is stored in *Torque Per Amp* (05.032).

L(s) is the transfer function of the load.

Parameter	03.011 *Frequency Controller Integral Gain Ki1*		
Short description	Defines the integral gain for frequency controller Ki1		
Mode	RFC-A		
Minimum	0.00	Maximum	655.35
Default	0.10	Units	s^2/rad
Type	16 Bit User Save	Update Rate	Background
Display Format	Standard	Decimal Places	2
Coding	RW, BU		

See *Frequency Controller Proportional Gain Kp1* (03.010).

Parameter	03.012 *Frequency Controller Differential Feedback Gain Kd1*		
Short description	Defines the differential gain for frequency controller Kd1		
Mode	RFC-A		
Minimum	0.00000	Maximum	0.65535
Default	0.00000	Units	1/rad
Type	16 Bit User Save	Update Rate	Background
Display Format	Standard	Decimal Places	5
Coding	RW, BU		

See *Frequency Controller Proportional Gain Kp1* (03.010).

Parameter	03.013 *Frequency Controller Proportional Gain Kp2*		
Short description	Defines the proportional gain for frequency controller Kp2		
Mode	RFC-A		
Minimum	0.000	Maximum	200.000
Default	0.100	Units	s/rad
Type	32 Bit User Save	Update Rate	Background
Display Format	Standard	Decimal Places	3
Coding	RW		

See *Frequency Controller Proportional Gain Kp1* (03.010).

Parameter	03.014 *Frequency Controller Integral Gain Ki2*		
Short description	Defines the integral gain for frequency controller Ki2		
Mode	RFC-A		
Minimum	0.00	Maximum	655.35
Default	0.10	Units	s^2/rad
Type	16 Bit User Save	Update Rate	Background
Display Format	Standard	Decimal Places	2
Coding	RW, BU		

See *Frequency Controller Proportional Gain Kp1* (03.010).

Parameter	03.015 *Frequency Controller Differential Feedback Gain Kd2*		
Short description	Defines the differential gain for frequency controller Kd2		
Mode	RFC-A		
Minimum	0.00000	Maximum	0.65535
Default	0.00000	Units	1/rad
Type	16 Bit User Save	Update Rate	Background
Display Format	Standard	Decimal Places	5
Coding	RW, BU		

See *Frequency Controller Proportional Gain Kp1* (03.010).

Parameter	03.016 *Frequency Controller Gain Select*		
Short description	Defines which gains are used for the frequency controller		
Mode	RFC-A		
Minimum	0	Maximum	2
Default	0	Units	
Type	8 Bit User Save	Update Rate	16ms
Display Format	Standard	Decimal Places	0
Coding	RW		

See *Frequency Controller Proportional Gain Kp1* (03.010).

Value	Selection
0	Kp1, Ki1 & Kd1 used
1	Kp2, Ki2 & Kd2 used
2	Automatic gain change at frequency threshold (*Gain Change Threshold* (03.017))

Parameter	03.017 *Gain Change Threshold*		
Short description	Defines the threshold that changes between the two sets of gains for the frequency controller		
Mode	RFC-A		
Minimum	0.00	Maximum	550.00
Default	0.00	Units	Hz
Type	32 Bit User Save	Update Rate	16ms
Display Format	Standard	Decimal Places	2
Coding	RW		

See *Frequency Controller Proportional Gain Kp1* (03.010).

Parameter	03.018 *Motor and Load Inertia*		
Short description	Displays the inertia of the motor and load		
Mode	RFC-A		
Minimum	0.00	Maximum	1000.00
Default	0.00	Units	kgm²
Type	32 Bit User Save	Update Rate	Background read
Display Format	Standard	Decimal Places	2
Coding	RW		

The motor and load inertia represents the total inertia driven by the motor. This is used to provide torque feed-forwards during acceleration when required (see *Torque Mode Selector* (04.011)).

It is possible to measure the inertia as part of the auto-tune process (See *Auto-tune* (05.012))

Parameter	03.022 *Hard Frequency Reference*		
Short description	Defines the value of the hard frequency reference		
Mode	RFC-A		
Minimum	−VM_SPEED_FREQ_REF	Maximum	VM_SPEED_FREQ_REF
Default	0.00	Units	Hz
Type	32 Bit User Save	Update Rate	4ms
Display Format	Standard	Decimal Places	2
Coding	RW, VM		

The *Hard Frequency Reference* (03.022) is a reference value which does not pass through the ramp system, but is added directly to the *Post Ramp Reference* (02.001). The *Hard Frequency Reference* (03.022) is only added when selected by the *Hard Frequency Reference Select* (03.023) and *Reference On* (01.011) is active.

Parameter	03.023 *Hard Frequency Reference Select*		
Short description	Set to 1 to enable the use of the hard frequency reference		
Mode	RFC-A		
Minimum	0	Maximum	1
Default	0	Units	
Type	1 Bit User Save	Update Rate	4ms
Display Format	Standard	Decimal Places	0
Coding	RW		

See *Hard Frequency Reference* (03.022).

Parameter	03.029 *Position*		
Short description	Displays the position counter in frequency or encoder mode		
Mode	RFC-A		
Minimum	0	Maximum	65535
Default		Units	
Type	16 Bit Power Down Save	Update Rate	Background
Display Format	Standard	Decimal Places	0
Coding	RO, FI, ND, NC, PT, BU		

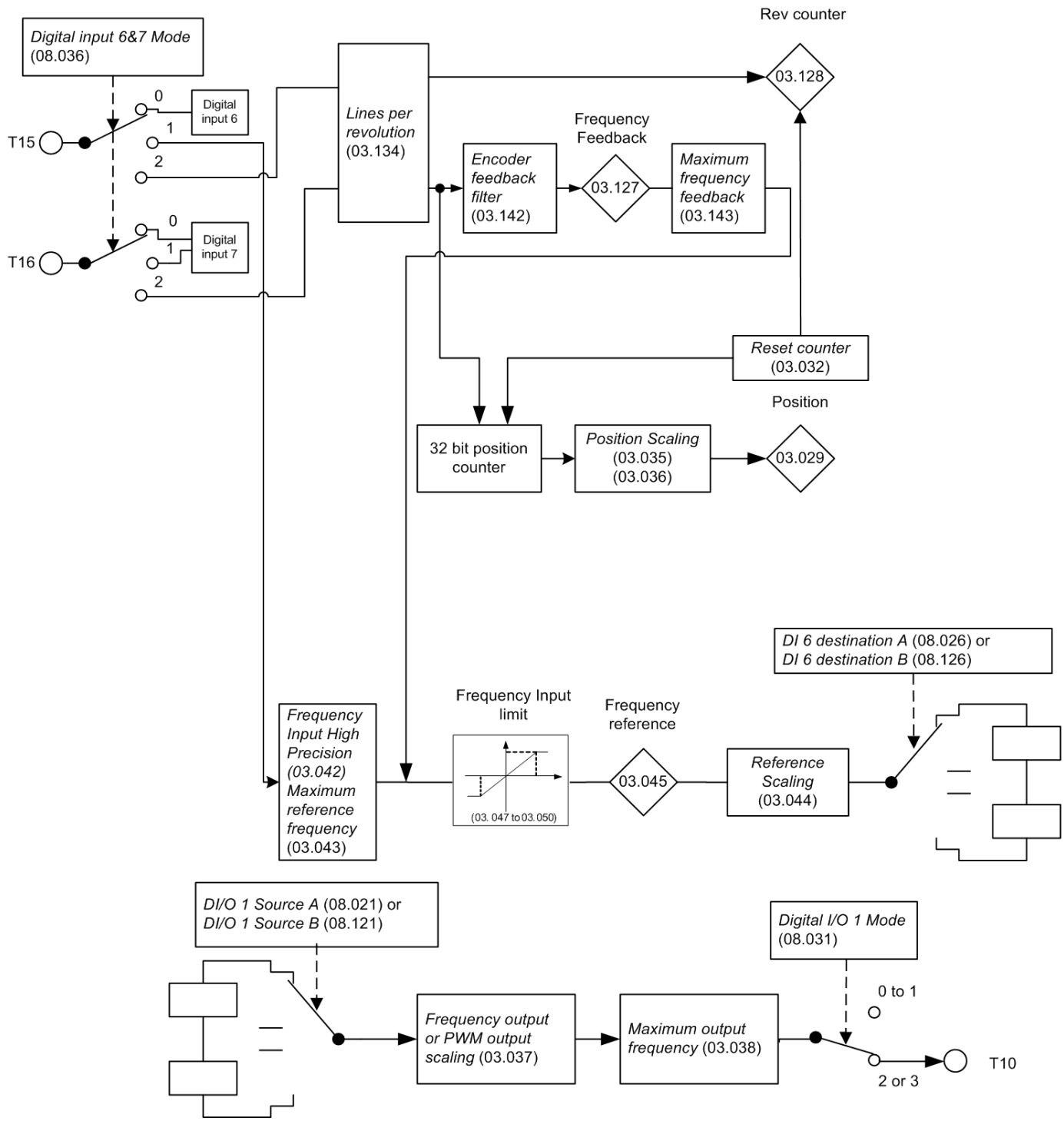

Fig.3.2: Encoder, Frequency input and output

Indicates the current value of the position counter in Frequency or Encoder mode. Position is reset to 0 if *Position Counter Reset* (03.032) is 1.

Parameter	**03.032 *Position Counter Reset***		
Short description	Set to 1 to reset the position counter		
Mode	RFC-A		
Minimum	0	Maximum	1
Default	0	Units	
Type	1 Bit Volatile	Update Rate	Background
Display Format	Standard	Decimal Places	0
Coding	RW, NC		

When set, this parameter resets the *Position* (03.029) and *Revolution Counter* (03.128) to 0.

Parameter	03.035 *Position Scaling Numerator*		
Short description	Defines the numerator used for scaling the pulse counter		
Mode	RFC-A		
Minimum	0.000	Maximum	1.000
Default	1.000	Units	
Type	16 Bit User Save	Update Rate	Background
Display Format	Standard	Decimal Places	3
Coding	RW, BU		

Position Scaling Numerator (03.035) and *Position Scaling Denominator* (03.036) are used to scale the pulse counter down to the required position units. The multiplying factor applied to the counter is defined as:

Position Scaling Numerator (03.035) ÷ *Position Scaling Denominator* (03.036)

Parameter	03.036 *Position Scaling Denominator*		
Short description	Defines the denonminator used for scaling the pulse counter		
Mode	RFC-A		
Minimum	0.000	Maximum	100.000
Default	1.000	Units	
Type	32 Bit User Save	Update Rate	Background
Display Format	Standard	Decimal Places	3
Coding	RW		

See *Position Scaling Numerator* (03.035).

Parameter	03.037 *Frequency Output or PWM Output Scaling*		
Short description	Defines the scaling factor applied to the frequency or PWM output		
Mode	RFC-A		
Minimum	0.000	Maximum	4.000
Default	1.000	Units	
Type	16 Bit User Save	Update Rate	Background
Display Format	Standard	Decimal Places	3
Coding	RW, BU		

Scale factor applied to the frequency or PWM output.

Parameter	03.038 *Maximum Output Frequency*		
Short description	Defines the maximum frequency required at the frequency output		
Mode	RFC-A		
Minimum	0	Maximum	3
Default	2	Units	kHz
Type	8 Bit User Save	Update Rate	Background
Display Format	Standard	Decimal Places	0
Coding	RW, TE, BU		

Value	*Text*	*Description*
0	1	Fmax 1kHz
1	2	Fmax 2kHz
2	5	Fmax 5kHz
3	10	Fmax 10kHz

Defines the maximum frequency of the output for both frequency and PWM ouput modes as set by *Digital I/O 01 mode* (08.031). For frequency mode (*Digital I/O 01 mode* (08.031) = 2) the choice of maximum output frequency depends on the requirement of the output. Due to limitations in the hardware, higher output frequencies do not offer the best resolution at the top end of the frequency range. The table below indicates the resolution at the programmed maximum frequency:

Fmax (kHz)	Resolution at Fmax
1	14 bit
2	13 bit
5	12 bit
10	11 bit

Parameter	03.042 *Frequency Input High Precision*		
Short description	Increase the frequency input measuring window		
Mode	RFC-A		
Minimum	0	Maximum	1
Default	0	Units	
Type	1 Bit User Save	Update Rate	Background
Display Format	Standard	Decimal Places	0
Coding	RW		

This bit should be set to 1 if a higher accuracy is required than that defined in *Maximum Reference Frequency* (03.043). If *Frequency Input High Precision* (03.042) = 1 then the frequency input measurement window is doubled. This doubles the accuracy of the frequency input measurment but increases the response time by two also.

If *Frequency Input High Precision* (03.042) = 0 then the frequency input measurement window is similar to Commander SK with better response time.

Parameter	03.043 *Maximum Reference Frequency*		
Short description	Defines the maximum frequency expected at the frequency input		
Mode	RFC-A		
Minimum	0.00	Maximum	100.00
Default	10.00	Units	kHz
Type	16 Bit User Save	Update Rate	Background
Display Format	Standard	Decimal Places	2
Coding	RW		

Defines the maximum frequency expected at the frequency input. The time the frequency is measured over is defined by

Measurement Time = 2048 / Maximum reference frequency

With a maximum measurement time of 0.341 seconds.
2048 is used to give the measurement more stability. The output is 10 bits.
Maximum reference frequency of less than 6kHz will have a lower resolution.

Parameter	03.044 *Frequency Reference Scaling*		
Short description	Defines the scaling factor applied to the frequency reference		
Mode	RFC-A		
Minimum	0.000	Maximum	4.000
Default	1.000	Units	
Type	16 Bit User Save	Update Rate	Background
Display Format	Standard	Decimal Places	3
Coding	RW, BU		

Scale factor applied to the frequency reference.

Parameter	03.045 *Frequency Reference*		
Short description	Displays the frequency reference		
Mode	RFC-A		
Minimum	-100.00	Maximum	100.00
Default		Units	%
Type	16 Bit Volatile	Update Rate	16ms
Display Format	Standard	Decimal Places	2
Coding	RO, FI, ND, NC, PT		

Indicates the reference input:

Digital input 6/7 mode (08.036) = 1 this is the reference from the frequency input.
Digital input 6/7 mode (08.036) = 2 this is the reference from the encoder AB input.

The reference has a 16ms filter.

Parameter	03.047 *Two Point Minimum Frequency*		
Short description	Defines the minimum frequency for scaling the frequency input		
Mode	RFC-A		
Minimum	-100.00	Maximum	100.00
Default	-100.00	Units	%
Type	16 Bit User Save	Update Rate	Background read
Display Format	Standard	Decimal Places	2
Coding	RW		

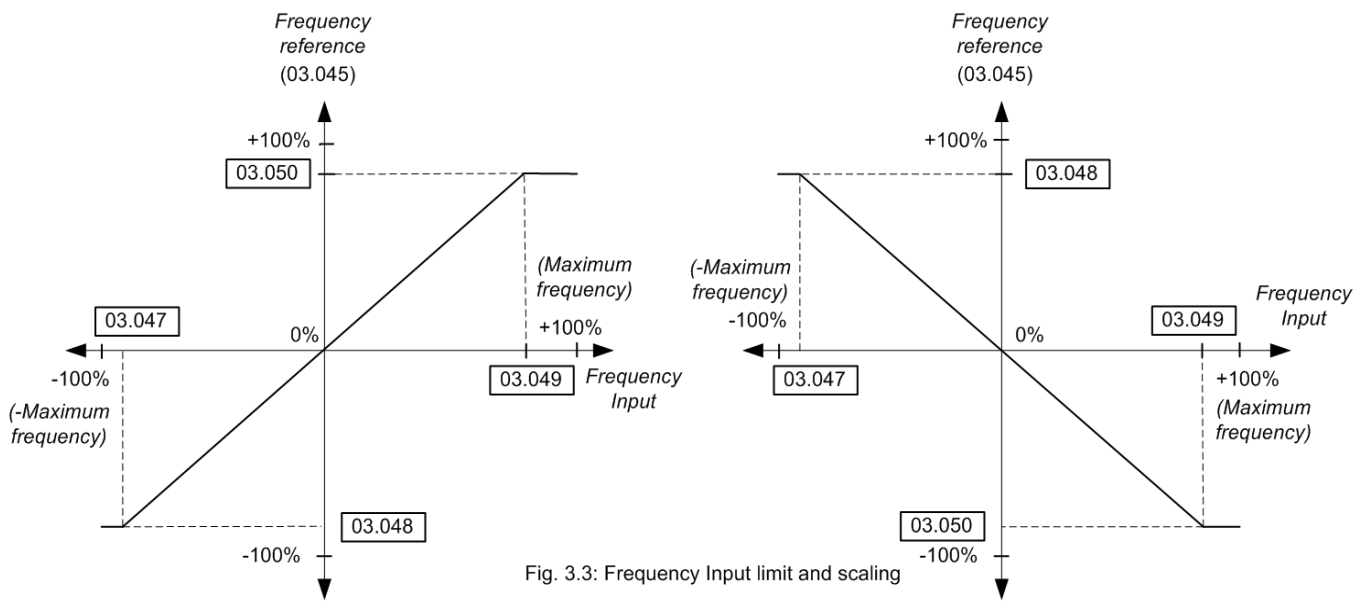

Fig. 3.3: Frequency Input limit and scaling

If *Digital input 6/7 mode* (08.036) = 1 then the frequency input is converted to percentage of *Maximum Reference Frequency* (03.043) and is then further limited by the following parameters to generate the frequency input reference *Frequency Reference* (03.045).

If *Digital input 6/7 mode* (08.036) = 2 then *Frequency feedback* (03.127) is converted to percentage of *Maximum Frequency Feedback* (03.143) and is then further limited by the following parameters to generate the frequency input reference *Frequency Reference* (03.045).

- *Two Point Minimum Frequency* (03.047)
- *Drive Reference at Minimum Frequency* (03.048)
- *Two Point Maximum Frequency* (03.049)
- *Drive Reference at Maximum Frequency* (03.050)

Parameter	03.048 *Drive Reference at Minimum Frequency*		
Short description	Defines the drive reference for scaling the frequency input at minimum frequency		
Mode	RFC-A		
Minimum	-100.00	Maximum	100.00
Default	-100.00	Units	%
Type	16 Bit User Save	Update Rate	Background read
Display Format	Standard	Decimal Places	2
Coding	RW		

See *Two Point Minimum Frequency* (03.047).

Parameter	03.049 *Two Point Maximum Frequency*		
Short description	Defines the maximum frequency for scaling the frequency input		
Mode	RFC-A		
Minimum	0.00	Maximum	100.00
Default	100.00	Units	%
Type	16 Bit User Save	Update Rate	Background read
Display Format	Standard	Decimal Places	2
Coding	RW		

See *Two Point Minimum Frequency* (03.047).

Parameter	03.050 *Drive Reference at Maximum Frequency*		
Short description	Defines the drive reference for scaling the frequency input at maximum frequency		
Mode	RFC-A		
Minimum	0.00	Maximum	100.00
Default	100.00	Units	%
Type	16 Bit User Save	Update Rate	Background read
Display Format	Standard	Decimal Places	2
Coding	RW		

See *Two Point Minimum Frequency* (03.047).

Parameter	03.072 *Motor speed percent*		
Short description	Displays the final demand reference as a percentage of the reference clamp		
Mode	RFC-A		
Minimum	-150.0	Maximum	150.0
Default		Units	%
Type	16 Bit Volatile	Update Rate	Background write
Display Format	Standard	Decimal Places	1
Coding	RO, FI, ND, NC, PT		

Motor speed percent (03.072) displays the *Final Demand Reference* (03.001) as a percentage of the reference clamp for the motor direction running. For forward direction the clamp used is either *Maximum Speed* (01.006) or *M2 Maximum Speed* (21.001). For reverse direction the clamp used is the modulas of either *Maximum Speed* (01.006) or *M2 Maximum Speed* (21.001) if *Negative Reference Clamp Enable* (01.008) = 0, or the modulas of either *Minimum Speed* (01.007) or *M2 Minimum Speed* (21.002) if *Negative Reference Clamp Enable* (01.008) = 1.

Motor speed percent (03.072) = | *Final Demand Reference* (03.001) | x 100 / Reference Clamp used

Parameter	03.079 *Sensorless Mode Filter*		
Short description	Defines the time constant for the filter applied to the output of the frequency estimator system		
Mode	RFC-A		
Minimum	0	Maximum	5
Default	0	Units	ms
Type	8 Bit User Save	Update Rate	Background read
Display Format	Standard	Decimal Places	0
Coding	RW, TE		

Value	*Text*
0	4
1	5
2	6
3	8
4	12
5	20

A filter with a 4ms time constant is always applied to the output of the frequency estimator system used for sensorless operation in closed loop mode. This time constant may be extended by increasing *Sensorless Mode Filter* (03.079) above 0. The output of the frequency estimator can include some ripple, which increases as the drive passes into field weakening and the filter can be used to remove this ripple. This is particularly useful when using standard ramp or spinning start with a low friction high inertia load, and can prevent over voltage trips when the drive has no braking resistor.

Parameter	03.080 *Sensorless Position*		
Short description	Displays the motor position representing a movement equivalent to one pole of the motor		
Mode	RFC-A		
Minimum	0	Maximum	65535
Default		Units	
Type	16 Bit Volatile	Update Rate	16ms
Display Format	Standard	Decimal Places	0
Coding	RO, ND, NC, PT, BU		

Sensorless Position (03.080) gives the motor position representing a movement equivalent to one pole of the motor.

For example in a rotary application with a 4 pole motor, the movement associated with one pole is a mechanical movement of 180°. *Sensorless Position* (03.080) is aligned as for a position feedback device with 0° phasing angle.

Parameter	03.127 *Frequency feedback*		
Short description	Frequency feedback from encoder		
Mode	RFC-A		
Minimum	0.00	Maximum	VM_SPEED_FREQ_REF
Default		Units	Hz
Type	32 Bit Volatile	Update Rate	16ms
Display Format	Standard	Decimal Places	2
Coding	RO, VM, ND, NC, PT		

This product regulates the required motor frequency and so this parameter provides a feedback value in terms of motor frequency when an encoder is being used as speed feedback.*Frequency feedback* (03.127) shows the motor frequency derived from the encoder feedback if *Digital input 6/7 mode* (08.036) = 2. The value shown is measured over a 16ms sliding window period and will depend on *Rotary Lines Per Revolution* (03.134) and the number of Pole Pairs of the machine (either *Number Of Motor Poles* (05.011) or *M2 Number of Motor Poles* (21.011)).

Parameter	03.128 *Revolution Counter*		
Short description	Displays the revolution counter when in encoder mode		
Mode	RFC-A		
Minimum	0	Maximum	65535
Default		Units	Revs
Type	16 Bit Volatile	Update Rate	16ms
Display Format	Standard	Decimal Places	0
Coding	RO, FI, ND, NC, PT, BU		

If *Digital input 6/7 mode* (08.036) is 2 (Encoder mode) this parameter counts the number of encoder revolutions up to 65535.

Counter is reset to 0 if *Position Counter Reset* (03.032) is 1.

Parameter	03.134 *Rotary Lines Per Revolution*		
Short description	Defines the number of rotary lines per revolution for the encoder connected		
Mode	RFC-A		
Minimum	0	Maximum	3
Default	1	Units	
Type	8 Bit User Save	Update Rate	Background
Display Format	Standard	Decimal Places	0
Coding	RW, TE		

Value	*Text*
0	512
1	1024
2	2048
3	4096

Rotary Lines Per Revolution (03.134) should be set to the number of lines per revolution for the encoder connected to the Di6 and Di7 inputs.

Parameter	03.142 *Encoder feedback filter*		
Short description	Defines the time period for a sliding window filter that may be applied to the feedback taken from the drive encoder feedback interface		
Mode	RFC-A		
Minimum	1	Maximum	31
Default	3	Units	ms
Type	8 Bit User Save	Update Rate	Background read
Display Format	Standard	Decimal Places	0
Coding	RW		

Encoder feedback filter (03.142) defines the time period for a sliding window filter that may be applied to the feedback taken from the drive encoder feedback interface. This is a multiple of 16ms window. The encoder is sampled every 16ms and therefore if *Encoder feedback filter* (03.142) = 1 the filter is disabled.

Parameter	03.143 *Maximum Frequency Feedback*		
Short description	Defines the maximum frequency expected at the frequency encoder feedback		
Mode	RFC-A		
Minimum	-VM_SPEED_FREQ_REF	Maximum	VM_SPEED_FREQ_REF
Default	See exceptions below	Units	Hz
Type	32 Bit User Save	Update Rate	Background
Display Format	Standard	Decimal Places	2
Coding	RW, VM		

Region	*Default Value*
50Hz	50.00
60Hz	60.00

Defines the maximum frequency feedback expected in *Frequency feedback* (03.127)

Menu 4 Single Line Descriptions − *Torque and Current control*

Mode: RFC-A

Parameter		Range	Default	Type					
04.001	Current Magnitude	±VM_DRIVE_CURRENT A		RO	Num	ND	NC	PT	FI
04.002	Torque Producing Current	±VM_DRIVE_CURRENT A		RO	Num	ND	NC	PT	FI
04.003	Final Torque Reference	±VM_TORQUE_CURRENT %		RO	Num	ND	NC	PT	FI
04.004	Final Current Reference	±VM_TORQUE_CURRENT %		RO	Num	ND	NC	PT	FI
04.005	Motoring Current Limit	±VM_MOTOR1_CURRENT_LIMIT %	165.0 %	RW	Num		RA		US
04.006	Regenerating Current Limit	±VM_MOTOR1_CURRENT_LIMIT %	165.0 %	RW	Num		RA		US
04.007	Symmetrical Current Limit	±VM_MOTOR1_CURRENT_LIMIT %	165.0 %	RW	Num		RA		US
04.008	Torque Reference	±VM_USER_CURRENT %	0.0 %	RW	Num				US
04.011	Torque Mode Selector	0 to 5	0	RW	Num				US
04.013	Current Controller Kp Gain	0.00 to 4000.00	20.00	RW	Num				US
04.014	Current Controller Ki Gain	0.000 to 600.000	40.000	RW	Num				US
04.015	Motor Thermal Time Constant 1	1 to 3000 s	179 s	RW	Num				US
04.016	Thermal Protection Mode	00 to 11	00	RW	Bin				US
04.017	Magnetising Current	±VM_DRIVE_CURRENT A		RO	Num	ND	NC	PT	FI
04.018	Final Current Limit	±VM_TORQUE_CURRENT %		RO	Num	ND	NC	PT	
04.019	Motor Protection Accumulator	0.0 to 100.0 %		RO	Num	ND	NC	PT	PS
04.020	Percentage Load	±VM_USER_CURRENT %		RO	Num	ND	NC	PT	FI
04.022	Inertia Compensation Enable	Off (0) or On (1)	Off (0)	RW	Bit				US
04.024	User Current Maximum Scaling	±VM_TORQUE_CURRENT_UNIPOLAR %	165.0 %	RW	Num		RA		US
04.025	Low Frequency Thermal Protection Mode	0 to 1	0	RW	Num				US
04.036	Motor Protection Accumulator Power-up Value	Power down (0), Zero (1), Real time (2)	Power down (0)	RW	Txt				US
04.041	User Over Current Trip Level	0 to 100 %	100 %	RW	Num		RA		US

RW	Read / Write	RO	Read-only	Bit	Bit parameter	Txt	Text string	Date	Date parameter	Time	Time parameter
Chr	Character parameter	Bin	Binary parameter	IP	IP address	Mac	MAC address	Ver	Version number	SMP	Slot, menu, parameter
Num	Number parameter	DE	Destination	ND	No default value	RA	Rating dependent	NC	Non-copyable	PT	Protected
FI	Filtered	US	User save	PS	Power-down save						

Menu 4 − *Torque and Current control*

Mode: RFC-A

Common Features

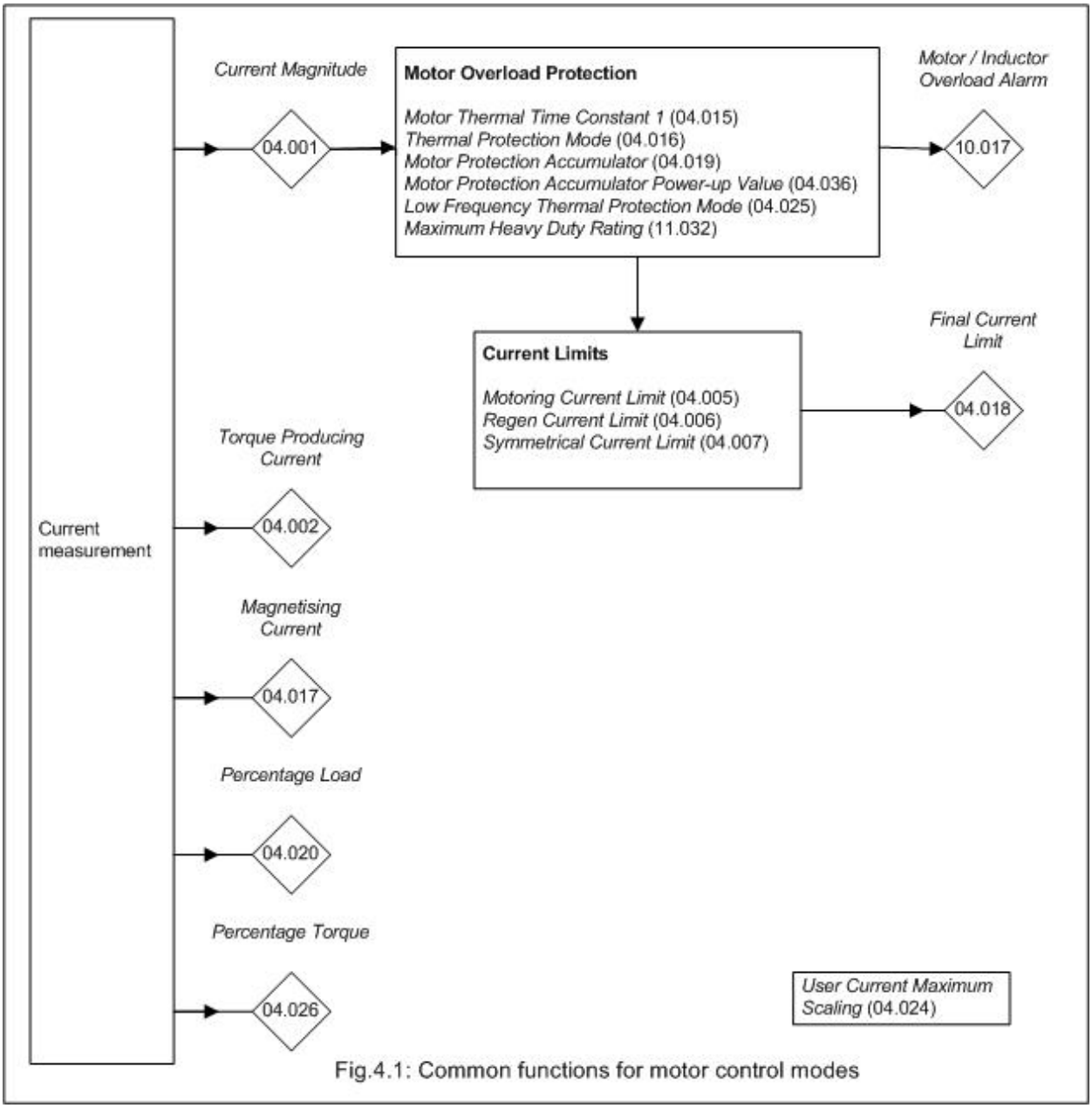

Fig.4.1: Common functions for motor control modes

Open loop current control

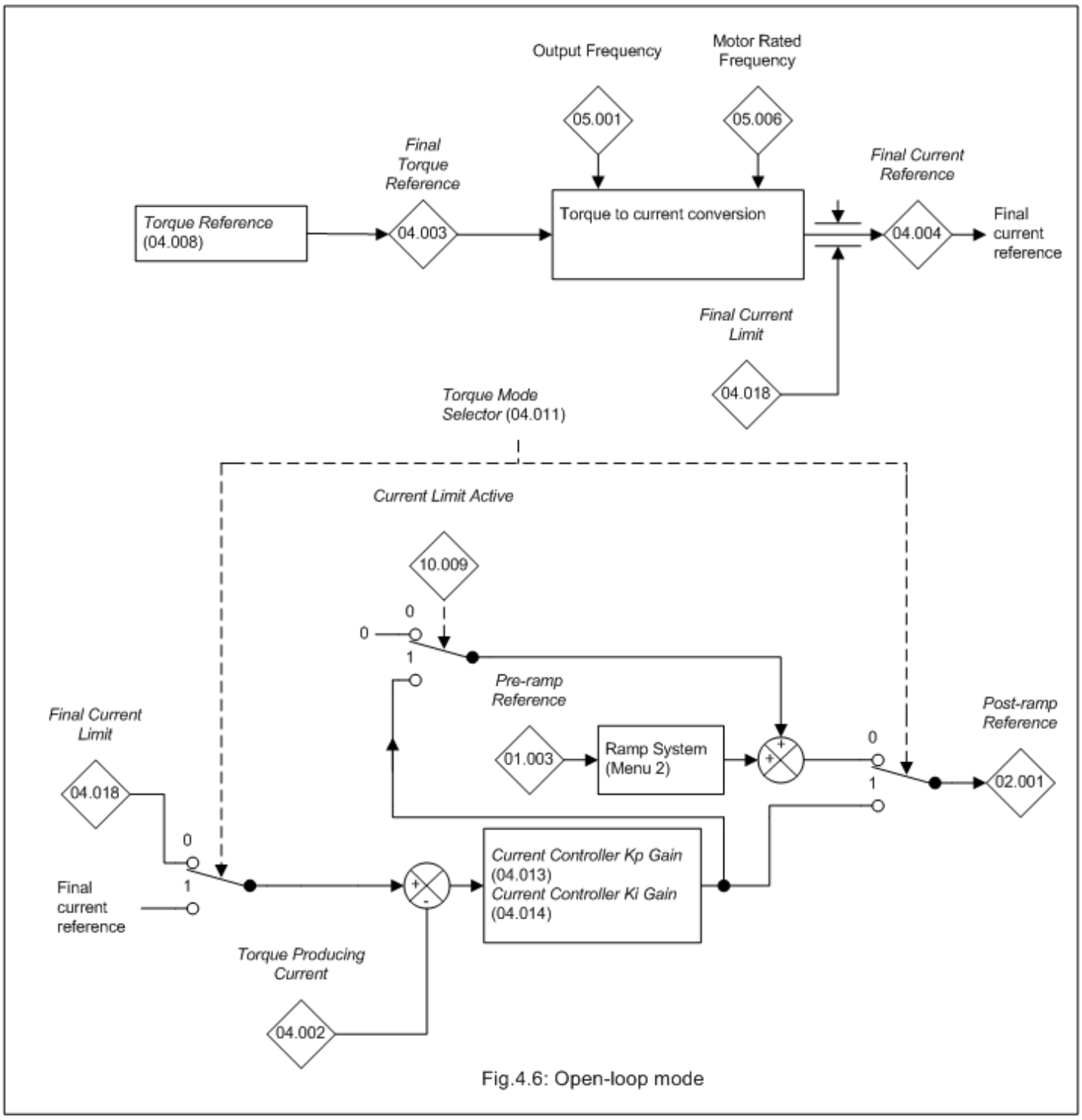

Fig.4.6: Open-loop mode

In open loop mode it is possible to control the motor frequency or the motor torque. When the frequency of the motor is controlled (*Torque Mode Selector* (04.011) = 0) the *Post Ramp Reference* (02.001) is defined by the ramp system unless the current limits are active. The *Post Ramp Reference* (02.001) can directly define the output frequency of the drive or this can be modified to compensate for motor slip. If the current limits are active (*Current Limit Active* (10.009) = 1) the ramp system remains active, but the output of the current controller is added to the ramp output so that the frequency applied to the motor is modified to try and reduce the torque producing current in the motor. For example, if the *Post Ramp Reference* (02.001) is positive (i.e. motor is running forwards) and the motor is overloaded with a motoring load a positive *Torque Producing Current* (04.002) is generated that will exceed the *Final Current Limit* (04.018). This gives a negative error which attempts to reduce the ramp output causing the motor to slow down.

When motor torque is being controlled (*Torque Mode Selector* (04.011) = 1) The *Final Torque Reference* (04.003) is converted to a current reference (flux compensation) and the current limits are applied giving the *Final Current Reference* (04.004). This is used as the reference input to the PI controller that regulates the torque producing current in the motor. The output of the PI controller is the *Post Ramp Reference* (02.001), and so the torque is controlled by increasing or decreasing the motor frequency. This system gives only moderate dynamic performance. For better torque control in a system without position feedback, closed loop current control should be used.

It is possible to disable the flux compensation by setting *Flux Control Compensation Disable* (05.028) to 1. This is only normally required to prevent motor instability when an inaccurate value for *Motor Rated Speed* (05.008) is being used in RFC-A mode.

Current Controller Kp Gain (04.013) and *Current Controller Ki Gain* (04.014) are the proportional and integral gains of the current controller. As already mentioned the current controller either provides current limits or closed-loop torque control by modifying the *Post Ramp Reference* (02.001). The control loop is also used in its torque mode during supply loss, or when the standard ramp control mode is active and the drive is decelerating, to regulate the

flow of current into the drive. Although the default settings have been chosen to give suitable gains for less demanding applications it may be necessary for the user to adjust the performance of the controller. The following is a guide to setting the gains for different applications.

Current limit operation
The current limits will normally operate with an integral term only, particularly below the point where field weakening begins. The proportional term is inherent in the loop. The integral term must be increased enough to counter the effect of the ramp which is still active even in current limit. For example, if the drive is operating at constant frequency and is overloaded the current limit system will try to reduce the output frequency to reduce the load. At the same time the ramp will try to increase the frequency back up to the demand level. If the integral gain is increased too far the first signs of instability will occur when operating around the point where field weakening begins. These oscillations can be reduced by increasing the proportional gain. A system has been included to prevent regulation because of the opposite actions of the ramps and the current limit. This can reduce the actual level that the current limit becomes active by up to 12.5%. This still allows the current to increase up to the current limit set by the user.

However the current limit flag (*Current Limit Active* (10.009)) could become active up to 12.5% below the current limit depending on the ramp rate being used.

Torque control
Again the controller will normally operate with an integral term only, particularly below the point where field weakening begins. The first signs of instability will appear around rated frequency, and can be reduced by increasing the proportional gain. The controller can be less stable in torque control mode compared to when it is used for current limiting. This is because load helps to stabilise the controller, and under torque control the drive may operate with light load. Under current limit the drive is often under heavy load unless the current limits are set at a low level.

Supply loss and standard ramp
The d.c. link voltage controller becomes active if supply loss detection is enabled and the drive supply is lost or standard ramp is being used (*Ramp Mode Select* (02.004) > 0) and the motor is regenerating. The d.c. link controller attempts to hold the d.c. link voltage at a fixed level by controlling the flow of current from the drive inverter into its d.c. link capacitors. The system is forced into current control mode and the output of the d.c. voltage controller is fed into the current controller as shown below.

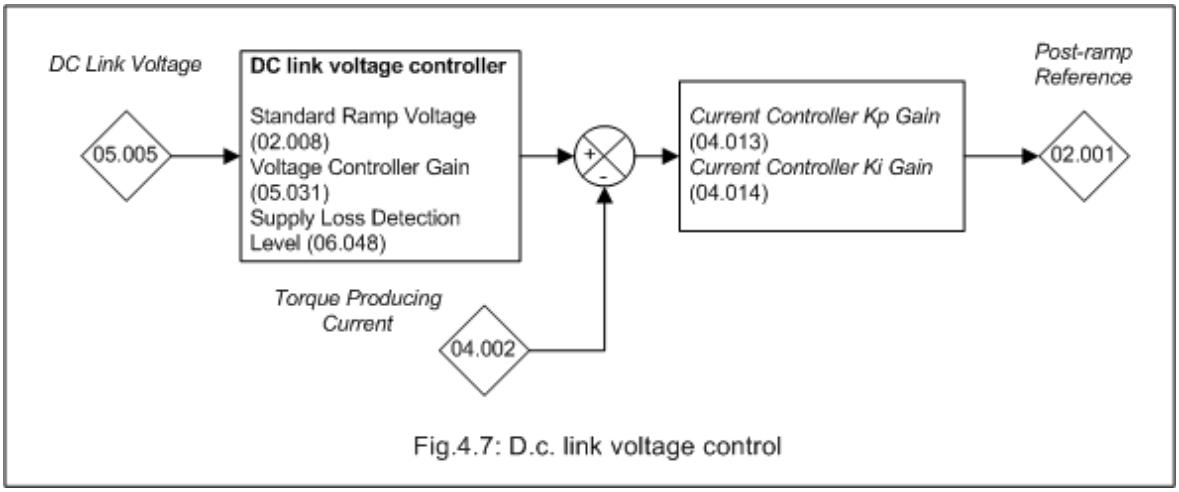

Fig.4.7: D.c. link voltage control

Although it is not usually necessary, the d.c. link voltage controller gain can be adjusted with the *Voltage Controller Gain* (05.031). However, it may be necessary to adjust the current controller gains to obtain the required performance. If the gains are not suitable it is best to set up the drive in torque control first. Set the gains to a value that does not cause instability around the point at which field weakening occurs. Then revert back to open loop frequency control in standard ramp mode. To test the controller the supply should be removed whilst the motor is running. It is likely that the gains can be increased further if required because the d.c. link voltage controller has a stabilising effect, provided that the drive is not required to operate in torque control mode.

RFC current control

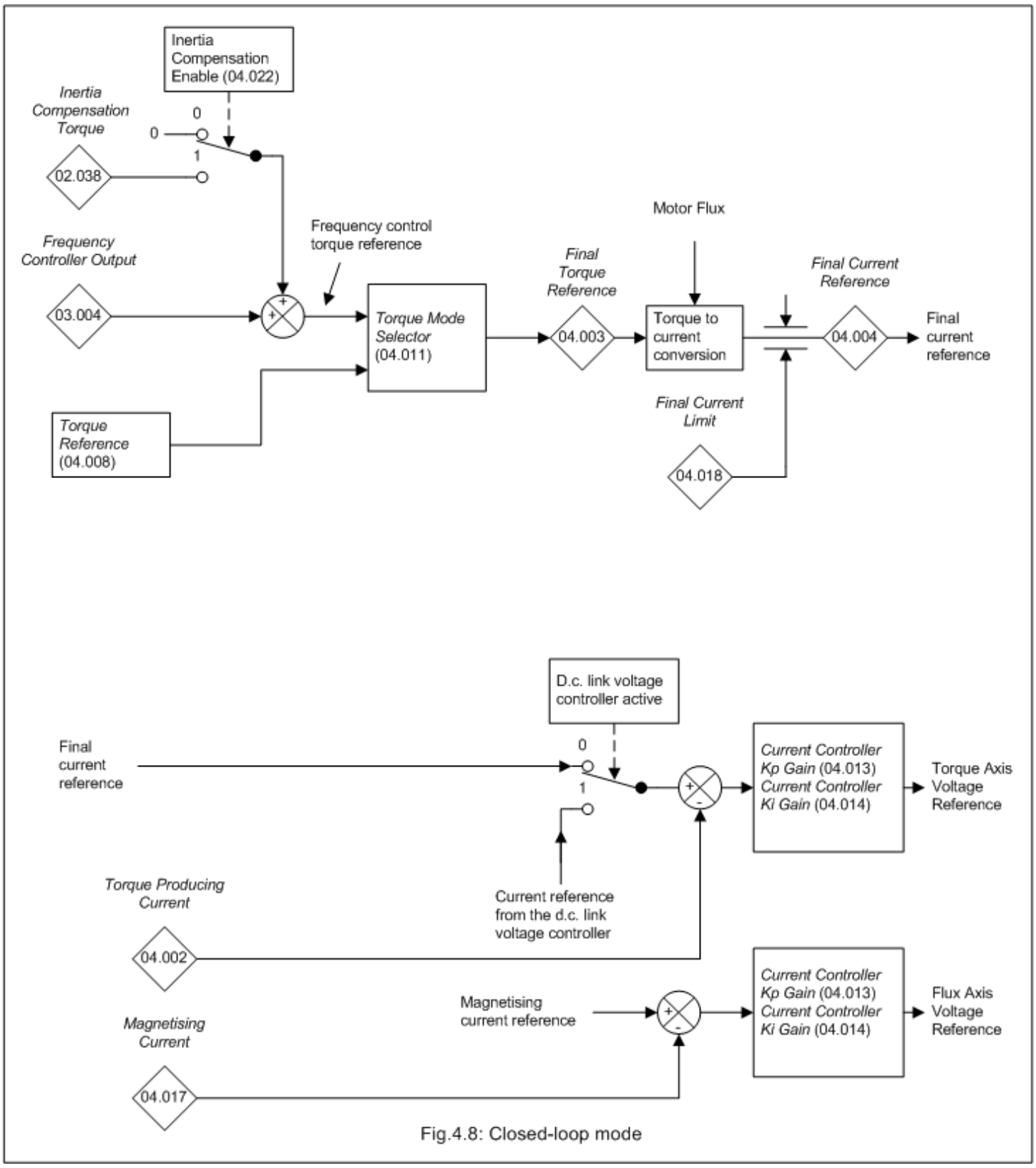

Fig.4.8: Closed-loop mode

In RFC-A mode, closed-loop current control is provided for the torque and flux producing currents. The torque reference is normally provided by the frequency controller, or from the torque reference, or as a combination of both depending on the value of the *Torque Mode Selector* (04.011). During supply loss or when standard ramp mode is selected and the motor is regenerating it is possible that the torque producing current reference may be provided by the d.c. link voltage controller as shown above.

Current Controller Kp Gain (04.013) and *Current Controller Ki Gain* (04.014) are the proportional and integral gains of the current controllers It should be noted that when an auto-tune is performed that measures the *Transient Inductance* (05.024) and *Stator Resistance* (05.017) the *Current Controller Kp Gain* (04.013) and *Current Controller Ki Gain* (04.014) are automatically set to the levels defined in the description. These represent the maximum levels that are likely to be used with this mode in most applications.

The current controller gains can either be set using auto-tuning (see *Auto-tune* (05.012)) or the values can be set up manually by the user. The calculations given below are those used by the auto-tuning system and should give good performance without excessive overshoot.

The proportional gain, *Current Controller Kp Gain* (04.013), is the most critical value in controlling the performance of the current controllers. The

required value can be calculated as:

Current Controller Kp Gain (04.013) = (L / T) x (I_{fs} / V_{fs}) x (256 / 37.5)

where

T is the sample time of the current controllers. The drive compensates for any change of sample time, and so it should be assumed that the sample time is equivalent to the base value of 167µs.

L is the motor inductance. For a permanent magnet motor this is half the phase to phase inductance that is normally specified by the manufacturer. For an induction motor this is the per phase transient inductance (sLs). The inductance for either of these motors can be taken from the manufacturer's data or it can be obtained from the value stored in the *Transient Inductance* (05.024) after auto-tuning.

I_{fs} is the peak full scale current feedback, i.e. full scale current x √2. The r.m.s. full scale current is given by *Full Scale Current Kc* (11.061), and so I_{fs} = *Full Scale Current Kc* (11.061) x √2.

V_{fs} is the maximum d.c. link voltage.

Therefore

Current Controller Kp Gain (04.013) = (L / 167µs) x (Kc x √2/ Vfs) x (256 / 37.5)

= K x L x Kc

where

K = [√2 / (V_{fs} x 167µs)] x (256 / 37.5)

There is one value of the scaling factor K for each drive voltage rating as shown in the table below.

***Drive Rated Voltage* (11.033)**	**V_{fs}**	**K**
200V	415V	1045
400V	830V	522
575V	990V	438

The integral gain, *Current Controller Ki Gain* (04.014), is less critical. A suggested value which matches the zero with the pole caused by the electrical time constant of the motor and ensures that the integral term does not contribute to current overshoot is given by

Current Controller Ki Gain (04.014) = *Current Controller Kp Gain* (04.013) x 5 x T / t_m

Where t_m is the motor time constant (L / R). R is the per phase stator resistance of the motor (i.e. half the resistance measured between two phases).

Therefore

Current Controller Ki Gain (04.014) = (K x L x Kc) x 5 x 167µs x R / L

= 0.0427 x K x R x Kc

The above equations give the gain values that should give a good response with minimal overshoot. If required the gains can be adjusted to modify the performance as follows:

1. *Current Controller Ki Gain* (04.014) can be increased to improve the performance of the current controllers by reducing the effects of inverter non-linearity. These effects become more significant with higher switching frequency. These effects will be more significant for drives with higher current ratings and higher voltage ratings. If *Current Controller Ki Gain* (04.014) is increased by a factor of 4 it is possible to get up to 10% overshoot in response to a step change of current reference. For high performance applications, it is recommended that *Current Controller Ki Gain* (04.014) is increased by a factor of 4 from the auto-tuned values. As the inverter non-linearity is worse with higher switching frequencies it may be necessary to increase *Current Controller Ki Gain* (04.014) by a factor of 8 for operation with 16kHz switching frequency.
2. It is possible to increase *Current Controller Kp Gain* (04.013) to reduce the response time of the current controllers. If *Current Controller Kp Gain* (04.013) is increased by a factor of 1.5 then the response to a step change of reference will give 12.5% overshoot. It is recommended that *Current Controller Ki Gain* (04.014) is increased in preference to *Current Controller Kp Gain* (04.013).

Parameter	**04.001 *Current Magnitude***		
Short description	Shows the instantaneous drive output current		
Mode	RFC-A		
Minimum	−VM_DRIVE_CURRENT	Maximum	VM_DRIVE_CURRENT
Default		Units	A
Type	32 Bit Volatile	Update Rate	16ms
Display Format	Standard	Decimal Places	2
Coding	RO, FI, VM, ND, NC, PT		

Current Magnitude (04.001) is the instantaneous drive output current scaled so that it represents the r.m.s. phase current in Amps under steady state conditions.

Parameter	04.002 *Torque Producing Current*		
Short description	Shows the instantaneous level of torque producing current		
Mode	RFC-A		
Minimum	−VM_DRIVE_CURRENT	Maximum	VM_DRIVE_CURRENT
Default		Units	A
Type	32 Bit Volatile	Update Rate	1ms
Display Format	Standard	Decimal Places	2
Coding	RO, FI, VM, ND, NC, PT		

Torque Producing Current (04.002) is the instantaneous level of torque producing current scaled so that it represents the r.m.s. level of torque producing current under steady state conditions. *Torque Producing Current* (04.002) is proportional to the torque produced by the motor provided field weakening is not active. For field weakening operation the *Torque Producing Current* (04.002) is boosted for a given level of torque to compensate for the reduction in the motor flux. The sign of *Torque Producing Current* (04.002) is defined in the table below.

The Rated Torque Producing Current for the motor is given by:

I_{Trated} = motor rated power factor (05.010) x motor rated current (05.007).

Sign of *Torque Producing Current* (04.002)	Sign of frequency	Direction of motor torque
+	+	Accelerating
-	+	Decelerating
+	-	Decelerating
-	-	Accelerating

Parameter	04.003 *Final Torque Reference*		
Short description	Shows the final torque reference		
Mode	RFC-A		
Minimum	−VM_TORQUE_CURRENT	Maximum	VM_TORQUE_CURRENT
Default		Units	%
Type	16 Bit Volatile	Update Rate	1ms
Display Format	Standard	Decimal Places	1
Coding	RO, FI, VM, ND, NC, PT		

The final torque reference *Final Torque Reference* (04.003) is defined as a percentage of the rated motor torque and in speed control mode consists of the *Frequency Controller Output* (03.004) and *Inertia Compensation Torque* (02.038) if *Inertia Compensation Enable* (04.022) is set to 1. For torque mode (*Torque Mode Selector* (04.011) = 1) the torque reference (*Torque Reference* (04.008) is passed through as the final torque demand. For other operating modes (*Torque Mode Selector* (04.011) > 1) please see *Torque Mode Selector* (04.011) for further explanation.

Parameter	04.004 *Final Current Reference*		
Short description	Shows the final current reference after the current limits		
Mode	RFC-A		
Minimum	−VM_TORQUE_CURRENT	Maximum	VM_TORQUE_CURRENT
Default		Units	%
Type	16 Bit Volatile	Update Rate	1ms
Display Format	Standard	Decimal Places	1
Coding	RO, FI, VM, ND, NC, PT		

The *Final Torque Reference* (04.003) is converted into the *Final Current Reference* (04.004) by applying a torque to current conversion and by applying the *Final Current Limit* (04.018). The torque to current conversion is applied as follows:

Current reference = *Final Torque Reference* (04.003) x Motor Rated Flux / Motor Flux

It is possible to disable the flux compensation by setting *Flux Control Compensation Disable* (05.028) to 1. This is only normally required to prevent motor instability when an inaccurate value for *Motor Rated Speed* (05.008) is being used in RFC-A mode.

Parameter	04.005 *Motoring Current Limit*		
Short description	Defines the current limit used when the motor is being accelerated away from standstill		
Mode	RFC-A		
Minimum	−VM_MOTOR1_CURRENT_LIMIT	Maximum	VM_MOTOR1_CURRENT_LIMIT
Default	165.0	Units	%
Type	16 Bit User Save	Update Rate	16ms
Display Format	Standard	Decimal Places	1
Coding	RW, VM, RA		

The *Motoring Current Limit* (04.005) limits the current when the motor is being accelerated away from standstill. The *Regenerating Current Limit* (04.006) limits the current when the motor is being decelerated towards standstill. If the *Symmetrical Current Limit* (04.007) is below the *Motoring Current Limit* (04.005) then it is used instead of the *Motoring Current Limit* (04.005). If the *Symmetrical Current Limit* (04.007) is below the *Regenerating Current Limit* (04.006) then it is used instead of the *Regenerating Current Limit* (04.006).

The maximum possible current limit (VM_MOTOR1_CURRENT_LIMIT [MAX]) varies between drive sizes with default parameters loaded. For some drive sizes the default value may be reduced below the value given by the parameter range limiting.

Parameter	04.006 *Regenerating Current Limit*		
Short description	Defines the current limit used when the motor is being decelerated towards standstill		
Mode	RFC-A		
Minimum	−VM_MOTOR1_CURRENT_LIMIT	Maximum	VM_MOTOR1_CURRENT_LIMIT
Default	165.0	Units	%
Type	16 Bit User Save	Update Rate	16ms
Display Format	Standard	Decimal Places	1
Coding	RW, VM, RA		

See *Motoring Current Limit* (04.005).

Parameter	04.007 *Symmetrical Current Limit*		
Short description	Defines the symmetrical current limit		
Mode	RFC-A		
Minimum	−VM_MOTOR1_CURRENT_LIMIT	Maximum	VM_MOTOR1_CURRENT_LIMIT
Default	165.0	Units	%
Type	16 Bit User Save	Update Rate	16ms
Display Format	Standard	Decimal Places	1
Coding	RW, VM, RA		

See *Motoring Current Limit* (04.005).

Parameter	04.008 *Torque Reference*		
Short description	Defines the torque reference		
Mode	RFC-A		
Minimum	−VM_USER_CURRENT	Maximum	VM_USER_CURRENT
Default	0.0	Units	%
Type	32 Bit User Save	Update Rate	1ms
Display Format	Standard	Decimal Places	1
Coding	RW, VM		

See *Final Torque Reference* (04.003).

Parameter	04.011 *Torque Mode Selector*		
Short description	Defines the torque mode used by the drive		
Mode	RFC-A		
Minimum	0	Maximum	5
Default	0	Units	
Type	8 Bit User Save	Update Rate	16ms
Display Format	Standard	Decimal Places	0
Coding	RW		

The value of the *Torque Mode Selector* (04.011) defines how the *Final Torque Reference* (04.003) is produced. If *Torque Mode Selector* (04.011) is set to 1, 2, 3 or 5 the ramps are disabled. If the *Torque Mode Selector* (04.011) is subsequently changed to 0 or 4 the ramps are enabled again. To prevent an unwanted torque transient during this changeover the *Post Ramp Reference* (02.001) is loaded with the *Estimated Frequency* (03.002) just prior to the mode change. This means that after the changeover the frequency error and hence the *Frequency Controller Output* (03.004) is zero. If *Stop Mode* (06.001) is set to 1 or 2 then ramps are enabled to stop the motor. If *Torque Mode Selector* (04.011) is set to 1, 2, 3 or 5 and *Stop Mode* (06.001) is 1 or 2 then again the *Post Ramp Reference* (02.001) is loaded with the *Estimated Frequency* (03.002) just prior to stopping the motor to prevent an unwanted torque transient. (Note that if *Hard Frequency Reference Select* (03.023) = 1, then the *Post Ramp Reference* (02.001) is loaded with *Estimated Frequency* (03.002) - *Hard Frequency Reference* (03.022) during these changeovers.)

The inputs to the torque mode selector system are referred to below as the Frequency control torque reference and the User torque reference. The Frequency control torque reference is the *Frequency Controller Output* (03.004) combined with the Feed Forward if this is enabled.

0: Frequency control mode
The *Final Torque Reference* (04.003) is the Frequency controller torque reference.

1: Torque control
The *Final Torque Reference* (04.003) is the User torque reference. The frequency is not limited by the drive but, the drive will trip at the over-frequency threshold if runaway occurs.

2: Torque control with frequency override
The *Final Torque Reference* (04.003) is the Frequency controller torque reference, but this reference is limited between 0 and the User torque reference. The effect is to produce an operating area as shown below if the Frequency controller torque reference and the User torque reference are both positive. The frequency controller will attempt to accelerate the motor to the *Final Demand Reference* (03.001) with a torque equivalent to the User torque reference. However, the frequency cannot be forced above the *Final Demand Reference* (03.001) by the drive because the required torque would be negative, and so it would be clamped to zero.

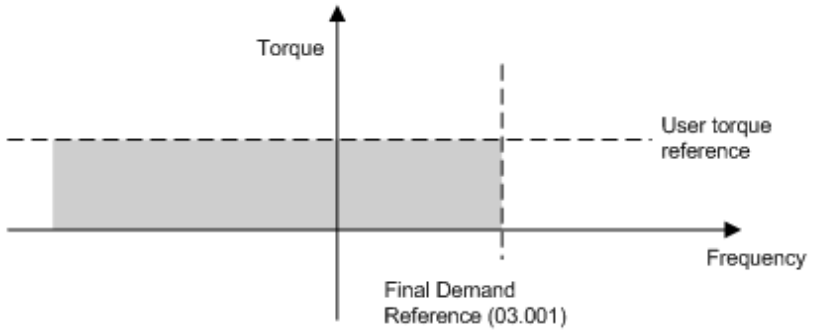

Fig.4.9: Torque control with frequency override
(*Positive Final Demand Reference* (03.001) and User torque reference)

Depending on the sign of the *Final Demand Reference* (03.001) and the User torque reference there are four possible areas of operation as shown below.

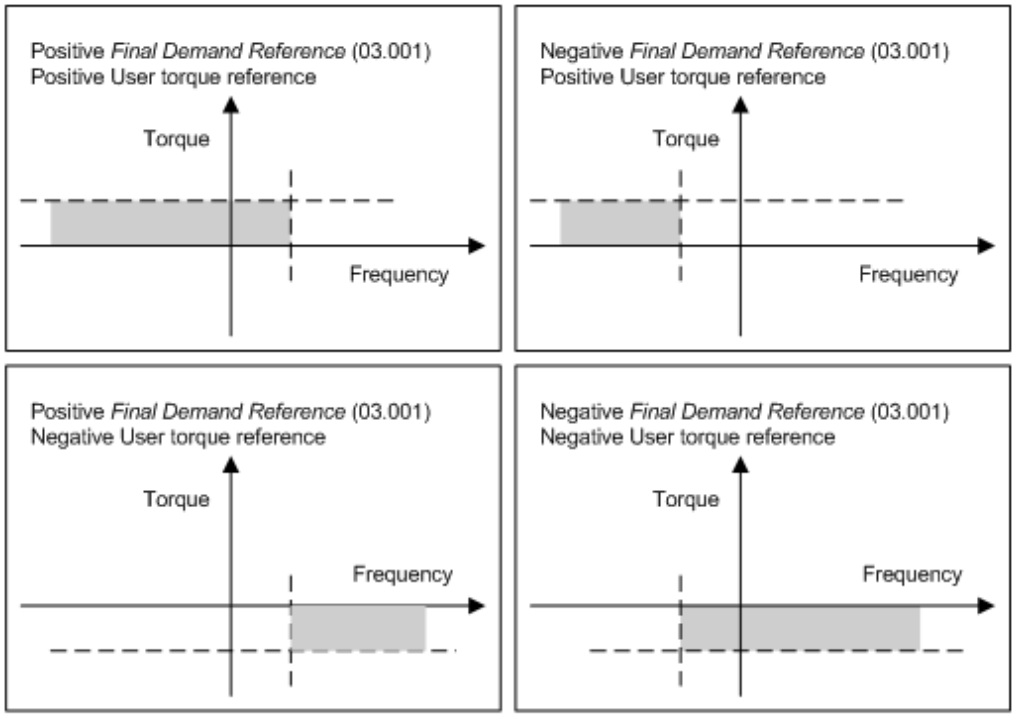

Fig.4.10: Torque control with frequency override
(Four possible areas of control)

3: Coiler/uncoiler mode
Positive *Final Demand Reference* (03.001): Positive User torque reference gives torque control with a positive frequency limit defined by the *Final Demand Reference* (03.001). A negative User torque reference gives torque control with a negative frequency limit of -0.2Hz.

Negative *Final Demand Reference* (03.001): Negative User torque reference gives torque control with a negative frequency limit defined by the *Final Demand Reference* (03.001). A positive User torque reference gives torque control with a negative frequency limit of + 0.2Hz.

Example of coiler operation:
This is an example of a coiler operating in the positive direction. The *Final Demand Reference* (03.001) is set to a positive value just above the coiler reference frequency. If the User torque reference is positive the coiler operates with a limited frequency, so that if the material breaks the frequency does not exceed a level just above the reference. It is also possible to decelerate the coiler with a negative User torque reference. The coiler will decelerate down to - 0.2Hz until a stop is applied. The operating area is shown below:

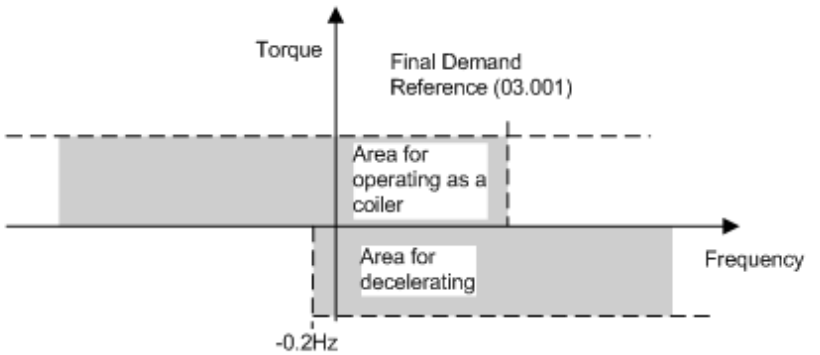

Fig.4.11: Coiler operation

Example of uncoiler operation:
This is an example for an uncoiler operating in the positive direction. The *Final Demand Reference* (03.001) should be set to a level just above the maximum normal frequency. When the User torque reference is negative the uncoiler will apply tension and try and rotate at 0.2Hz in reverse, and so take up any slack. The uncoiler can operate at any positive frequency applying tension. If it is necessary to accelerate the uncoiler a positive User torque reference is used. The frequency will be limited to the *Final Demand Reference* (03.001). The operating area is the same as that for the coiler and is shown below:

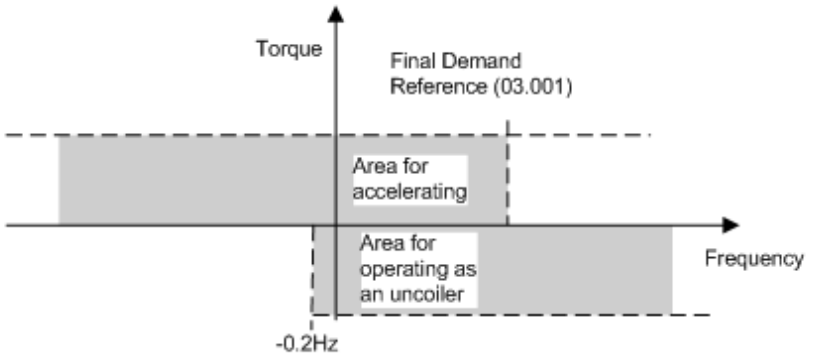

Fig.4.12: Uncoiler operation

4: Frequency control with torque feed-forward
The Frequency control torque reference and User torque reference are summed so that the drive operates under frequency control, but a torque value may be added to the output of the frequency controller. This can be used to improve the regulation of systems where the frequency controller gains need to be low for stability.

5: Bi-directional torque control with frequency override
This mode is similar to coiler/uncoiler mode except that the modulus of the *Final Demand Reference* (03.001) is used in each direction to give an operating area as shown below.

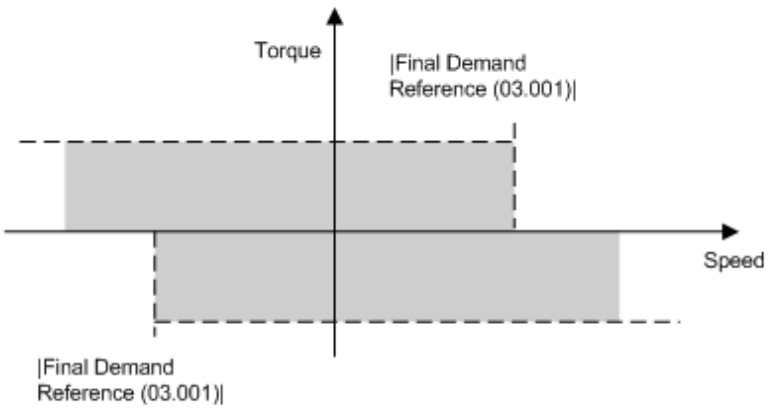

Fig.4.13: Bi-directional torque control with frequency override

Parameter	04.013 *Current Controller Kp Gain*		
Short description	Defines the current loop controller proportional gain		
Mode	RFC-A		
Minimum	0.00	Maximum	4000.00
Default	20.00	Units	
Type	32 Bit User Save	Update Rate	Background read
Display Format	Standard	Decimal Places	2
Coding	RW		

Current Controller Kp Gain (04.013) and *Current Controller Ki Gain* (04.014) are the proportional and integral gains of the current controller.

Refer to *Torque and Current control* .

Parameter	04.014 *Current Controller Ki Gain*		
Short description	Defines the current loop controller integral gain		
Mode	RFC-A		
Minimum	0.000	Maximum	600.000
Default	40.000	Units	
Type	32 Bit User Save	Update Rate	Background read
Display Format	Standard	Decimal Places	3
Coding	RW		

See *Current Controller Kp Gain* (04.013).

Parameter	04.015 *Motor Thermal Time Constant 1*		
Short description	Set to the thermal time constant for the motor		
Mode	RFC-A		
Minimum	1	Maximum	3000
Default	179	Units	s
Type	16 Bit User Save	Update Rate	Background read
Display Format	Standard	Decimal Places	0
Coding	RW		

A single time constant thermal model is provided that can be used to estimate the motor temperature as a percentage of its maximum allowed temperature. The input to the model is the *Current Magnitude* (04.001). Throughout the following discussion *Motor Rated Current* (05.007) is used in the model assuming *Select Motor 2 Parameters* (11.045) = 0. If *Select Motor 2 Parameters* (11.045) = 1 then *M2 Motor Rated Current* (21.007) and *M2 Motor Thermal Time Constant 1* (21.016) are used instead.

Percentage Losses
The losses in the motor are calculated as a percentage value, so that under these conditions the *Motor Protection Accumulator* (04.019) would eventually reach 100%.

Percentage Losses = 100% x [Load Related Losses]

where

Load Related Losses = $(I / (K_1 \times I_{Rated}))^2$

where
I = *Current Magnitude* (04.001)
I_{Rated} = *Motor Rated Current* (05.007)

The value of K_1 defines the continuous allowable motor overload as a proportion of the *Motor Rated Current* (05.007) before the *Motor Protection Accumulator* (04.019) reaches 100%. The value of K_1 can be used to model reduced cooling at low frequencies and to allow the motor to operate under rated conditions with a small margin to prevent spurious trips. K_1 is defined in more detail later.

Motor Protection Accumulator
So far the steady state motor losses have been defined, but the motor model must estimate the temperature within the motor under dynamically changing conditions, and so the *Motor Protection Accumulator* (04.019) is given by the following equation.

$T = \text{Percentage Losses} \times (1 - e^{-t/\tau 1})]$

where
T = *Motor Protection Accumulator* (04.019)
τ1 = *Motor Thermal Time Constant 1* (04.015)

Reduced cooling with lower frequency
If *Low Frequency Thermal Protection Mode* (04.025) = 0 the characteristic is intended for a motor which can operate at rated current over the whole frequency range. Induction motors with this type of characteristic normally have forced cooling. If *Low Frequency Thermal Protection Mode* (04.025) = 1 the characteristic is intended for motors where the cooling effect of motor fan reduces with reduced motor frequency below half of rated frequency. The maximum value for K_1 is 1.05, so that above the knee of the characteristics the motor can operate continuously up to 105% of rated current.

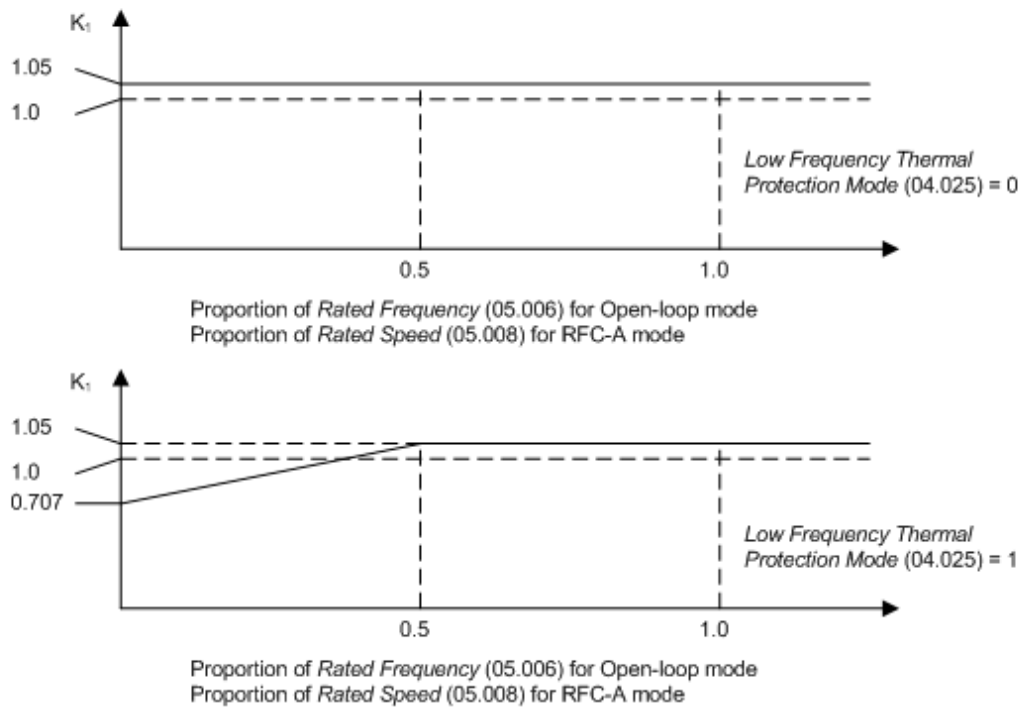

Fig.4.2: K_1 when *Motor Rated Current* (05.007) ≤ *Maximum Heavy Duty Rating* (11.032)

If *Motor Rated Current* (05.007) > *Maximum Heavy Duty Rating* (11.032) then K_1 is defined as shown below. Two different characteristics are provided, but in both cases the motor performance is limited at lower frequencies and the permissible overload is reduced from 105% to 101%.

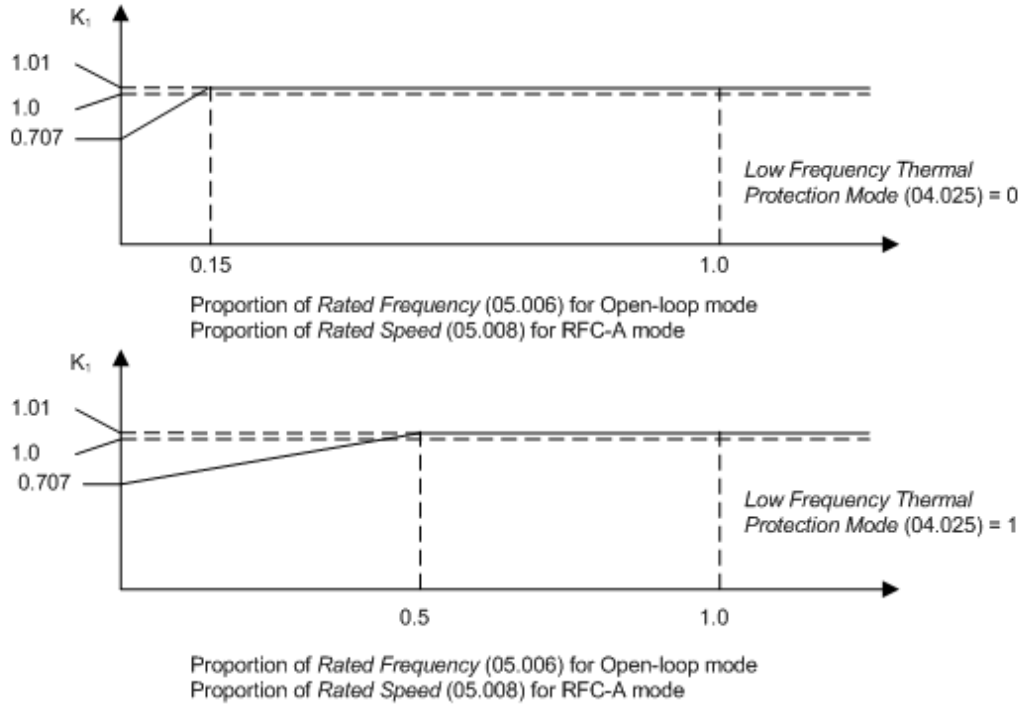

Fig.4.3: K_1 when *Motor Rated Current* (05.007) > *Maximum Heavy Duty Rating* (11.032)

Time for Motor Protection Accumulator to reach 100%
The time for the *Motor Protection Accumulator* (04.019) to change from its initial value to 100% is given by the following equation:

Time to reach 100.0% = $-\tau 1 \times \ln[(1 - C1) / (C_0 - C_1)]$

C_0 represents the conditions that have persisted for long enough for the *Motor Protection Accumulator* (04.019) to reach a steady state value. If the motor current is I_0 then

$C_0 = [(I_0 / (K_1 \times I_{Rated})]^2$

C_1 represents the conditions that begin at the start of the time being calculated. If the motor current is I_1 then

$C_1 = [(I_1 / (K_1 \times I_{Rated})]^2$

Example 1: *Motor Thermal Time Constant 1* (04.015) = 179s, the initial current is zero, *Motor Rated Current* (05.007) ≤ *Maximum Heavy Duty Rating* (11.032) and the new level of current is 1.5 x *Motor Rated Current* (05.007).

$C_0 = 0$
$C_1 = [1.5 / (1.05 \times 1.0)]^2 = 2.041$

Time to reach 100.0% = $-179 \times \ln(1 - 1/C_1) = -179 \times \ln(1 - (1 / 2.041)) = 120$s

This is the default setting for Open loop and Closed Loop modes allowing an induction motor to run at 150% rated current for 120s from cold.

Motor Protection Accumulator Reset
The initial value in the *Motor Protection Accumulator* (04.019) at power-up is defined by *Motor Protection Accumulator Power-up Value* (04.036) as given in the table below.

***Motor Protection Accumulator Power-up Value* (04.036)**	***Motor Protection Accumulator* (04.019) at power-up**
Power Down	The value is saved at power-down and is used as the initial value at power-up
Zero	The value is set to zero
Real Time	If a real-time clock is present and if *Date/Time Selector* (06.019) is set up to select the real-time clock then the value saved at power-down is modified to include the effect of the motor thermal protection time constants over the time between power-down and power-up. This modified value is then used as the initial value at power-up. If no real time clock is present and this option is selected then the value saved at power-down is used as the initial value.

The *Motor Protection Accumulator* (04.019) is reset under the following conditions:

1. *Select Motor 2 Parameters* (11.045) is modified and *Motor Rated Current* (05.007) and *M2 Motor Rated Current* (21.007) are different.
2. *Motor Rated Current* (05.007) is modified when *Select Motor 2 Parameters* (11.045) = 0, or *M2 Motor Rated Current* (21.007) is modified when *Select Motor 2 Parameters* (11.045) = 1.

Motor Protection Accumulator Warning
If Percentage Losses > 100% then eventually the *Motor Protection Accumulator* (04.019) will reach 100% causing the drive to trip or the current limits to be reduced. If this is the case and *Motor Protection Accumulator* (04.019) > 75.00% then a Motor Overload alarm indication is given and *Motor Overload Alarm* (10.017) is set to one.

Parameter	**04.016 *Thermal Protection Mode***		
Short description	Set to the require thermal protection mode		
Mode	RFC-A		
Minimum	0 (Display: 00)	Maximum	3 (Display: 11)
Default	0 (Display: 00)	Units	
Type	8 Bit User Save	Update Rate	Background read
Display Format	Binary	Decimal Places	0
Coding	RW		

Thermal Protection Mode (04.016) defines the action taken by the drive when *Motor Protection Accumulator* (04.019) reaches 100% and/or the drive thermal monitoring parameters approach their trip levels. The bits in Thermal *Thermal Protection Mode* (04.016) are defined as follows:

Bit	**Function**
0	0 = *Motor Too Hot* trip is initiated when *Motor Protection Accumulator* (04.019) reaches 100% 1 = *Motor Too Hot* trip is disabled and current limiting on motor overload is active as described below
1	0 = Drive thermal monitoring current limiting is disabled 1 = Drive thermal monitoring current limiting is described is active

Because of the limited number of segments on drives with an LED display, these drives will indicate the parameter value as a decimal value rather than a binary value.

The required current limit is derived from the current limit parameters (*Motoring Current Limit* (04.005) to *Symmetrical Current Limit* (04.007) or 21.027 to 21.029) depending on the set-up and conditions. The current limit can be further limited by current limit on motor overload and/or drive temperature monitoring as shown below to give the *Final Current Limit* (04.018).

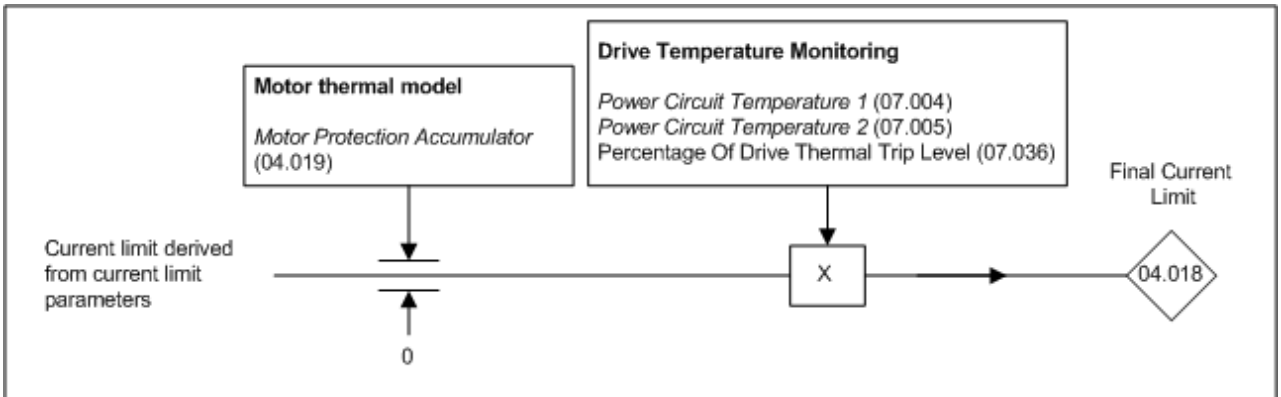

Fig.4.4: Current limit modification

Current limiting on motor overload
When the *Motor Protection Accumulator* (04.019) reaches 100.0% the current limit is limited to (K - 0.05) x 100.0%. This limitation is removed when the *Motor Protection Accumulator* (04.019) falls below 95.0%.

Drive thermal monitoring current limiting
If any of the drive temperature monitoring parameters (*Stack Temperature* (07.004) and *Auxiliary Temperature* (07.005)) are above their trip threshold minus 10°C the one that is closest to its trip threshold is used to modify the current limits as follows:

Final Current Limit (04.018) = Current limit x (Trip threshold - T) / (Trip threshold - 10°C)

where T is the drive temperature monitoring parameter value.

If the *Percentage Of Drive Thermal Trip Level* (07.036) is above 90% then the final current limit is modified as follows:

Final Current Limit (04.018) = Current limit x (100% - *Percentage Of Drive Thermal Trip Level* (07.036)) / 10%

If both of the above attempt to reduce the final current limit the lowest calculated value of current limit is used. This system has the effect of reducing the current limit to zero at the point where the drive should be tripped because its thermal monitoring has reached a trip threshold. This is intended to limit the load on the drive to prevent it from tripping when supplying a load that increases with frequency and does not include rapid transients (i.e. a fan).

Parameter	**04.017** ***Magnetising Current***		
Short description	Shows the instantaneous level of magnetising current		
Mode	RFC-A		
Minimum	−VM_DRIVE_CURRENT	Maximum	VM_DRIVE_CURRENT
Default		Units	A
Type	32 Bit Volatile	Update Rate	1ms
Display Format	Standard	Decimal Places	2
Coding	RO, FI, VM, ND, NC, PT		

Magnetising Current (04.017) is the instantaneous level of magnetising current scaled so that it represents the r.m.s. level of magnetising current under steady state conditions.

Parameter	**04.018** ***Final Current Limit***		
Short description	Shows the final current limit that is applied to the torque producing current		
Mode	RFC-A		
Minimum	−VM_TORQUE_CURRENT	Maximum	VM_TORQUE_CURRENT
Default		Units	%
Type	16 Bit Volatile	Update Rate	16ms
Display Format	Standard	Decimal Places	1
Coding	RO, VM, ND, NC, PT		

Final Current Limit (04.018) is the current limit level that is applied to the torque producing current. See *Thermal Protection Mode* (04.016).

Parameter	**04.019** ***Motor Protection Accumulator***		
Short description	Shows the level of the motor protection accumulator		
Mode	RFC-A		
Minimum	0.0	Maximum	100.0
Default		Units	%
Type	16 Bit Power Down Save	Update Rate	Background write
Display Format	Standard	Decimal Places	1
Coding	RO, ND, NC, PT		

See *Motor Thermal Time Constant 1* (04.015).

Parameter	04.020 *Percentage Load*		
Short description	Shows the level of torque producing current as a percentage of rated torque producing current for the motor		
Mode	RFC-A		
Minimum	−VM_USER_CURRENT	Maximum	VM_USER_CURRENT
Default		Units	%
Type	16 Bit Volatile	Update Rate	Background write
Display Format	Standard	Decimal Places	1
Coding	RO, FI, VM, ND, NC, PT		

Percentage Load (04.020) gives the *Torque Producing Current* (04.002) as a percentage of the rated torque producing current for the motor. Positive values indicate motoring and negative values represent regenerating.

Parameter	04.022 *Inertia Compensation Enable*		
Short description	Set to enable inertia compensation		
Mode	RFC-A		
Minimum	0	Maximum	1
Default	0	Units	
Type	1 Bit User Save	Update Rate	Background read
Display Format	Standard	Decimal Places	0
Coding	RW		

If *Inertia Compensation Enable* (04.022) is set to one the *Inertia Compensation Torque* (02.038) is added to the output of the frequency controller. Inertia *Inertia Compensation Torque* (02.038) is calculated based on the rate of change of the frequency reference. This can be used in frequency or torque controller applications to provide the torque necessary to accelerate or decelerate the load.

Parameter	04.024 *User Current Maximum Scaling*		
Short description	Defines the maximum for the torque reference and percentage load parameters		
Mode	RFC-A		
Minimum	−VM_TORQUE_CURRENT_UNIPOLAR	Maximum	VM_TORQUE_CURRENT_UNIPOLAR
Default	165.0	Units	%
Type	16 Bit User Save	Update Rate	Background read
Display Format	Standard	Decimal Places	1
Coding	RW, VM, RA		

User Current Maximum Scaling (04.024) defines the variable maximum/minimums VM_USER_CURRENT which is applied to *Percentage Load* (04.020). This is useful when routing these parameters to an analogue output as it allows the full scale output value to be defined by the user.

It also defines the maximum value of *Torque Reference* (04.008) such that when torque is is being set by an analog input the maximum value set here will be requested when the analog input is at maximum.

The maximum value (VM_TORQUE_CURRENT_UNIPOLAR [MAX]) varies between drive sizes with default parameters loaded. For some drive sizes the default value may be reduced below the value given by the parameter range limiting.

Parameter	04.025 *Low Frequency Thermal Protection Mode*		
Short description	Set to enable low frequency thermal protection mode		
Mode	RFC-A		
Minimum	0	Maximum	1
Default	0	Units	
Type	8 Bit User Save	Update Rate	Background read
Display Format	Standard	Decimal Places	0
Coding	RW		

See *Motor Thermal Time Constant 1* (04.015).

Parameter	04.036 *Motor Protection Accumulator Power-up Value*		
Short description	Defines the initial power-up value of the motor protection accumulator		
Mode	RFC-A		
Minimum	0	Maximum	2
Default	0	Units	
Type	8 Bit User Save	Update Rate	Background write
Display Format	Standard	Decimal Places	0
Coding	RW, TE		

Value	*Text*
0	Power down
1	Zero
2	Real time

See *Motor Thermal Time Constant 1* (04.015).

Parameter	04.041 *User Over Current Trip Level*		
Short description	Defines the trip level for the user over-current trip as a percentage of the drive over current trip level.		
Mode	RFC-A		
Minimum	0	Maximum	100
Default	100	Units	%
Type	8 Bit User Save	Update Rate	Background Read
Display Format	Standard	Decimal Places	0
Coding	RW, RA		

The User Over-Current Trip protection level in % of *Full Scale Current Kc* (11.061) which is the full scale current in r.m.s. Amps. The User Over-Current Trip may be used to limit the output current of the drive when supplying a motor with a lower current rating than the drive. If the value of *User Over Current Trip Level* (04.041) is set at 100%, the user over-current trip is disabled.

Menu 5 Single Line Descriptions − *Motor Control*

Mode: RFC-A

Parameter		Range	Default	Type					
05.001	Output Frequency	±VM_SPEED_FREQ_REF Hz		RO	Num	ND	NC	PT	FI
05.002	Output Voltage	±VM_AC_VOLTAGE V		RO	Num	ND	NC	PT	FI
05.003	Output Power	±VM_POWER kW		RO	Num	ND	NC	PT	FI
05.004	Motor Rpm	±33000 rpm		RO	Num	ND	NC	PT	FI
05.005	D.c. Link Voltage	±VM_DC_VOLTAGE V		RO	Num	ND	NC	PT	FI
05.006	Motor Rated Frequency	0.00 to 550.00 Hz	50Hz: 50.00 Hz 60Hz: 60.00 Hz	RW	Num				US
05.007	Motor Rated Current	±VM_RATED_CURRENT A	0.00 A	RW	Num		RA		US
05.008	Motor Rated Speed	0.0 to 33000.0 rpm	50Hz: 1500.0 rpm 60Hz: 1800.0 rpm	RW	Num				US
05.009	Motor Rated Voltage	0 to VM_AC_VOLTAGE_SET V	110V drive: 230 V 200V drive: 230 V 400V drive 50Hz: 400 V 400V drive 60Hz: 460 V 575V drive: 575 V 690V drive: 690 V	RW	Num		RA		US
05.010	Motor Rated Power Factor	0.00 to 1.00	0.85	RW	Num		RA		US
05.011	Number Of Motor Poles	Automatic (0) to 32 (16) Poles	Automatic (0) Poles	RW	Txt				US
05.012	Auto-tune	0 to 3	0	RW	Num		NC		
05.013	Flux Optimisation Select	0 to 1	0	RW	Num				US
05.015	Low Frequency Voltage Boost	0.0 to 25.0 %	3.0 %	RW	Num				US
05.017	Stator Resistance	0.0000 to 99.9999 Ω	0.0000 Ω	RW	Num		RA		US
05.018	Maximum Switching Frequency	±VM_MAX_SWITCHING_FREQUENCY kHz	3 (3) kHz	RW	Txt		RA		US
05.021	Mechanical Load Test Level	0 to 100 %	0 %	RW	Num				US
05.024	Transient Inductance	0.000 to 500.000 mH	0.000 mH	RW	Num		RA		US
05.025	Stator Inductance	0.00 to 5000.00 mH	0.00 mH	RW	Num		RA		US
05.026	High Dynamic Performance Enable	Off (0) or On (1)	Off (0)	RW	Bit				US
05.028	Flux Control Compensation Disable	Off (0) or On (1)	Off (0)	RW	Bit				US
05.029	Saturation Breakpoint 1	0.0 to 100.0 %	50.0 %	RW	Num				US
05.030	Saturation Breakpoint 3	0.0 to 100.0 %	75.0 %	RW	Num				US
05.031	Voltage Controller Gain	1 to 30	1	RW	Num				US
05.032	Torque Per Amp	0.00 to 500.00 Nm/A		RO	Num	ND	NC	PT	
05.034	Percentage Flux	0.0 to 150.0 %		RO	Num	ND	NC	PT	FI
05.035	Auto-switching Frequency Change Disable	0 to 1	0	RW	Num				US
05.037	Switching Frequency	±VM_MAX_SWITCHING_FREQUENCY kHz		RO	Txt	ND	NC	PT	
05.038	Minimum Switching Frequency	±VM_MAX_SWITCHING_FREQUENCY kHz	2 (2) kHz	RW	Txt		RA		US
05.040	Spin Start Boost	0.0 to 10.0	1.0	RW	Num				US
05.042	Reverse Output Phase Sequence	Off (0) or On (1)	Off (0)	RW	Bit				US
05.059	Maximum Deadtime Compensation	0.000 to 10.000 µs	0.000 µs	RO	Num		NC	PT	US
05.060	Current At Maximum Deadtime Compensation	0.00 to 100.00 %	0.00 %	RO	Num		NC	PT	US
05.061	Disable Deadtime Compensation	Off (0) or On (1)	Off (0)	RW	Bit				US
05.062	Saturation Breakpoint 2	0.0 to 100.0 %	0.0 %	RW	Num				US
05.063	Saturation Breakpoint 4	0.0 to 100.0 %	0.0 %	RW	Num				US
05.081	Change to maximum drive switching frequency at low output current	Off (0) or On (1)	Off (0)	RW	Bit				US
05.084	Low Frequency Estimator Threshold	0.0 to 100.0 %	0.0 %	RW	Num				US

RW	Read / Write	RO	Read-only	Bit	Bit parameter	Txt	Text string	Date	Date parameter	Time	Time parameter
Chr	Character parameter	Bin	Binary parameter	IP	IP address	Mac	MAC address	Ver	Version number	SMP	Slot, menu, parameter
Num	Number parameter	DE	Destination	ND	No default value	RA	Rating dependent	NC	Non-copyable	PT	Protected
FI	Filtered	US	User save	PS	Power-down save						

Menu 5 − *Motor Control*

Mode: RFC-A

The drive controls asynchronous machines in closed closed loop speed and current control through the use of a speed estimator to determine the speed of the motor.

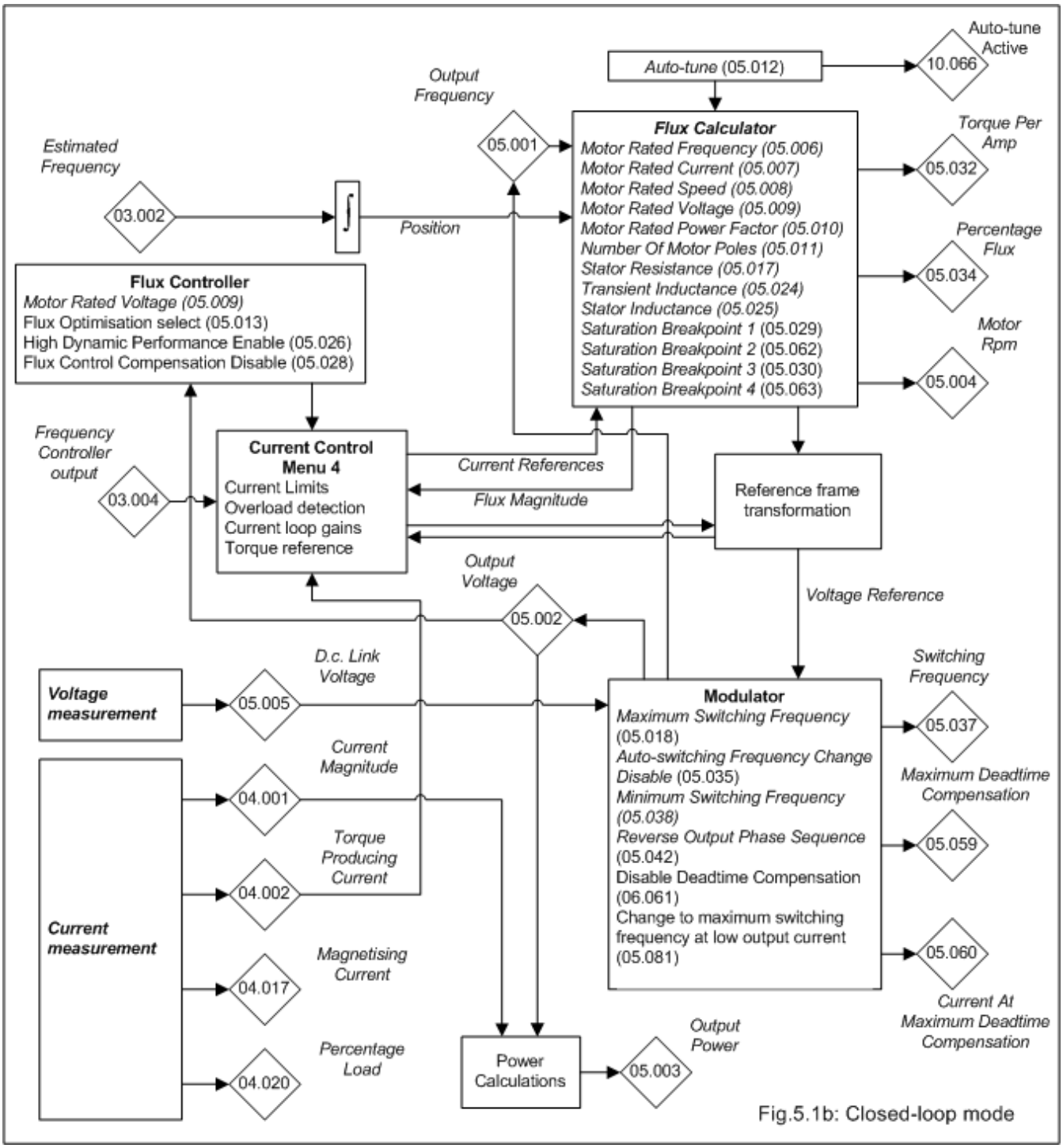

Fig.5.1b: Closed-loop mode

Parameter	05.001 *Output Frequency*		
Short description	Displays the output frequency of the drive		
Mode	RFC-A		
Minimum	−VM_SPEED_FREQ_REF	Maximum	VM_SPEED_FREQ_REF
Default		Units	Hz
Type	32 Bit Volatile	Update Rate	16ms
Display Format	Standard	Decimal Places	2
Coding	RO, FI, VM, ND, NC, PT		

The output frequency is not controlled directly, but the *Output Frequency* (05.001) is a measurement of the frequency applied to the motor.

Parameter	05.002 *Output Voltage*		
Short description	Displays the r.m.s. line to line voltage at the a.c. terminals of the drive		
Mode	RFC-A		
Minimum	−VM_AC_VOLTAGE	Maximum	VM_AC_VOLTAGE
Default		Units	V
Type	16 Bit Volatile	Update Rate	16ms
Display Format	Standard	Decimal Places	0
Coding	RO, FI, VM, ND, NC, PT		

The *Output Voltage* (05.002) is the r.m.s line to line voltage at the a.c. terminals of the drive.

Parameter	05.003 *Output Power*		
Short description	Displays the power flowing via the a.c. terminals of the drive		
Mode	RFC-A		
Minimum	−VM_POWER	Maximum	VM_POWER
Default		Units	kW
Type	32 Bit Volatile	Update Rate	16ms
Display Format	Standard	Decimal Places	2
Coding	RO, FI, VM, ND, NC, PT		

The *Output Power* (05.003) is the power flowing via the a.c. terminals of the drive. The power is derived as the dot product of the output voltage and current vectors, and so this is correct even if the motor parameters are incorrect and the motor model does not align the reference frame with the flux axis of the motor. A positive value of power indicates power flowing from the drive to the motor.

The maximum power is VM_POWER[MAX] = √3 x VM_AC_VOLTAGE[MAX] x *Full Scale Current Kc* (11.061) / 1000

Parameter	05.004 *Motor Rpm*		
Short description	Displays the Final Demand Reference in units of rpm		
Mode	RFC-A		
Minimum	-33000	Maximum	33000
Default		Units	rpm
Type	32 Bit Volatile	Update Rate	Background write
Display Format	Standard	Decimal Places	0
Coding	RO, FI, ND, NC, PT		

Motor Rpm (05.004) = 60 x Frequency / Pole pairs

where
Pole pairs = the numeric value of *Number Of Motor Poles* (i.e. 3 for a 6 pole motor)

The frequency used to derive the *Motor Rpm* (05.004) is the *Final Demand Reference* (03.001). The maximum and minimum values allow for a 10% over-shoot of the speed.

Parameter	05.005 *D.c. Link Voltage*		
Short description	Displays the voltage across the d.c. link of the drive		
Mode	RFC-A		
Minimum	−VM_DC_VOLTAGE	Maximum	VM_DC_VOLTAGE
Default		Units	V
Type	16 Bit Volatile	Update Rate	16ms
Display Format	Standard	Decimal Places	0
Coding	RO, FI, VM, ND, NC, PT		

D.c. Link Voltage (05.005) gives the voltage across the d.c. link of the drive.

Parameter	05.006 *Motor Rated Frequency*		
Short description	Set to the rated frequency of the motor		
Mode	RFC-A		
Minimum	0.00	Maximum	550.00
Default	See exceptions below	Units	Hz
Type	32 Bit User Save	Update Rate	Background read
Display Format	Standard	Decimal Places	2
Coding	RW		

Region	*Default Value*
50Hz	50.00
60Hz	60.00

Motor Rated Frequency (05.006), *Motor Rated Speed* (05.008) and *Number Of Motor Poles* (05.011) are used to calculate the rated slip of the motor which is used by the motor control algorithm. An incorrect estimate of rated slip has the following effects:

1. Reduced efficiency

2. Reduction of maximum torque available from the motor
3. Reduced transient performance
4. Inaccurate control of absolute torque in torque control modes
5. The drive will produce rated flux in the motor in the shortest possible time when it is enabled. Incorrect parameter values will affect the flux build-up time.

Parameter	**05.007** ***Motor Rated Current***		
Short description	Set to the rated current rated of the motor		
Mode	RFC-A		
Minimum	0.00	Maximum	VM_RATED_CURRENT
Default	0.00	Units	A
Type	32 Bit User Save	Update Rate	Background read
Display Format	Standard	Decimal Places	2
Coding	RW, VM, RA		

Motor Rated Current is used as follows:

1. To define the rated operating conditions for motor thermal protection. See *Thermal Protection Mode* (04.016).
2. To define the range of the current limits.
3. In the motor control algorithm for Open-loop and Closed Loop asynchronous modes.

Parameter	**05.008** ***Motor Rated Speed***		
Short description	Set to the rated speed of the motor		
Mode	RFC-A		
Minimum	0.0	Maximum	33000.0
Default	See exceptions below	Units	rpm
Type	32 Bit User Save	Update Rate	Background read
Display Format	Standard	Decimal Places	1
Coding	RW		

Region	***Default Value***
50Hz	1500.0
60Hz	1800.0

Motor Rated Speed (05.008) is not used by the motor control algorithms, but it is used by the motor thermal protection system.

Parameter	**05.009** ***Motor Rated Voltage***		
Short description	Set to the rated voltage of the motor		
Mode	RFC-A		
Minimum	0	Maximum	VM_AC_VOLTAGE_SET
Default	See exceptions below	Units	V
Type	16 Bit User Save	Update Rate	16ms
Display Format	Standard	Decimal Places	0
Coding	RW, VM, RA		

Voltage	***Region***	***Default Value***
110V	All	230
200V	All	230
400V	50Hz	400
400V	60Hz	460
575V	All	575
690V	All	690

The *Motor Rated Voltage* (05.009) is the maximum continuous voltage that is applied to the motor. Normally this should be set to the motor nameplate value. If the drive is supplied through its own diode rectifier the maximum possible output voltage is just below the supply voltage level, and so the output voltage will not reach *Motor Rated Voltage* (05.009) if this is equal to or above the supply voltage. If high transient performance is required at higher speeds then *Motor Rated Voltage* (05.009) should be set to 95% of the minimum d.c. link voltage divided by √2 to allow some headroom for the drive to control the motor current. If the drive is fed through its own diode rectifier the minimum d.c. link voltage is approximately supply voltage x √2.

In some cases it may be necessary to set the *Motor Rated Voltage* (05.009) to a value other than the motor nameplate value. If this is the case the *Motor Rated Frequency* (05.006) and *Motor Rated Speed* (05.008) should be set up as follows:

K = *Motor Rated Voltage* (05.009) / motor rated voltage

Motor Rated Frequency (05.006) = motor rated frequency x K

Motor Rated Speed (05.008) = motor rated speed + [(K - 1) x motor rated frequency x 60 / (number of motor poles / 2)]

The *Motor Rated Voltage* (05.009), *Motor Rated Frequency* (05.006) and *Number Of Motor Poles* (05.011) are used during the auto-tuning process to determine the flux level required in the motor for normal operation. Therefore if the *Motor Rated Voltage* (05.009) is set to a value other than the nameplate value and the above adjustment is not applied the motor may be under or over-fluxed

Parameter	05.010 *Motor Rated Power Factor*		
Short description	Set to the rated power factor of the motor. This value can be measured by the drive during a rotating autotune		
Mode	RFC-A		
Minimum	0.00	Maximum	1.00
Default	0.85	Units	
Type	16 Bit User Save	Update Rate	Background read/write
Display Format	Standard	Decimal Places	2
Coding	RW, RA		

Motor Rated Power Factor (05.010) is the true power factor of the motor under rated conditions, i.e. the cosine of the angle between the motor voltage and current. If *Stator Inductance* (05.025) is set to a non-zero value then the stator inductance is used to calculate the rated magnetising current for the motor and the rated power factor can be calculated by the drive. Therefore if *Stator Inductance* (05.025) is non-zero *Motor Rated Power Factor* (05.010) is continuously set to the calculated value of rated power factor by the drive. If *Stator Inductance* (05.025) is set to zero then *Motor Rated Power Factor* (05.010) is used to estimate the rated magnetising current which is an approximation and not as accurate. *Stator Inductance* (05.025) can be measured by the drive during auto-tuning and this is the preferred option, however, if it is not possible to obtain the value for *Stator Inductance* (05.025) then *Motor Rated Power Factor* (05.010) should be set to the motor nameplate value.

Parameter	05.011 *Number Of Motor Poles*		
Short description	Set to the number of poles of the motor		
Mode	RFC-A		
Minimum	0	Maximum	16
Default	0	Units	PolePairs
Type	8 Bit User Save	Update Rate	Background read
Display Format	Standard	Decimal Places	0
Coding	RW, BU		

If *Number Of Motor Poles* (05.011) = 0 the number of motor poles are calculated automatically as given below.

Pole pairs = 60 x *Motor Rated Frequency* (05.006) / *Motor Rated Speed* (05.008) rounded down to the nearest integer.

If *Number Of Motor Poles* (05.011) > 0 the value is taken as the number of pole pairs.

When viewed with a keypad, the value of 0 is displayed as Automatic and any non 0 value is displayed is the twice the parameter value representing number of motor poles rather than pole pairs.

Parameter	05.012 *Auto-tune*		
Short description	Defines the auto-tune test to be performed		
Mode	RFC-A		
Minimum	0	Maximum	3
Default	0	Units	
Type	8 Bit Volatile	Update Rate	Background read
Display Format	Standard	Decimal Places	0
Coding	RW, NC		

The following describes how an auto-tune test can be initiated and normal operation can be resumed after the test:

1. An auto-tune test cannot be initiated if the drive is tripped or the drive inverter is active, i.e. *Drive Healthy* (10.001) = 0 or *Drive Active* (10.002) = 1. The inverter can be made inactive by ensuring that the Final drive enable is inactive (see Menu 06), or the Final drive run (see Menu 06) is inactive and *Hold Zero Frequency* (06.008) = 0.
2. An auto-tune test is initiated by setting *Auto-tune* (05.012) to a non-zero value and making the Final drive enable and the Final drive run active.
3. All tests that move the motor will move the motor in the forward direction if *Reverse Select* (01.012) = 0 or the reverse direction if *Reverse Select* (01.012) = 1.
4. If the auto-tune sequence is completed successfully the Final drive enable is set to the inactive state and *Auto-tune* (05.012) is set to zero. The Final drive enable can only be set to the active state again by removing the enable and reapplying it. The enable can be removed by setting *Drive Enable* (06.015) = 0, or by setting bit 0 of the *Control Word* (06.042) to 0 provided *Control Word Enable* (06.043) = 1, or by making *Hardware Enable* = 0.
5. If a trip occurs during the auto-tune sequence the drive will go into the trip state and *Auto-tune* (05.012) is set to zero. As in 4. above, the enable must be removed and re-applied before the drive can be restarted after the trip has been reset. However, care should be taken because if the auto-tune was not completed the drive parameters that should have been measured and set up will still have their original values.
6. If the Final drive enable is made active, the Final drive run is inactive and *Hold Zero Frequency* (06.008) = 1 the drive would normally be in the Stop state (i.e. the inverter is active, but the frequency or speed reference is 0). However, the transition from the Disable state to the Stop state cannot be made in closed loop mode if *Auto-tune* (05.012) is non-zero. This is intended to prevent the drive entering the Stop state when an auto-tune test is required, but the enable is applied before the run as the control of the motor may rely on position estimation.

The following describes the effects of the auto-tune test on the drive :

1. All auto-tune tests rely on the motor being stationary when the test is initiated to give accurate results.
2. If *Select Motor 2 Parameters* (11.045) = 0 then the parameters associated with motor map 1 are updated as a result of the test, and if *Select Motor 2 Parameters* (11.045) = 1 the parameters associated with motor map 2 are updated.
3. Only when the whole test is completed, are the results written to the appropriate parameters and these parameters saved in the drive non-volatile memory. If *Parameter Cloning* (11.042) is set to 3 or 4 the parameters are also written to a non-volatile media card fitted on the drive.

The table below shows the parameters required for motor control indicating which should be set by the user and which can be measured with an auto-tune test.

Parameter	Required for	Measured in test
Motor Rated Frequency (05.006)	Basic control	
Motor Rated Current (05.007)	Basic control	
Motor Rated Speed (05.008)	Basic control	
Motor Rated Voltage (05.009)	Basic control	
Motor Rated Power Factor (05.010)	Basic control	2
Number Of Motor Poles (05.011)	Basic control	
Stator Resistance (05.017)	Basic control	1, 2
Transient Inductance (05.024)	Basic control	1, 2
Stator Inductance (05.025)	Improved performance	2
Saturation Breakpoint 1 (05.029)	Improved performance with flux weakening	2
Saturation Breakpoint 3 (05.030)	Improved performance with flux weakening	2
Maximum Deadtime Compensation (05.059)	Basic control	1, 2
Current At Maximum Deadtime Compensation (05.060)	Basic control	1, 2
Saturation Breakpoint 2 (05.062)	Improved performance with flux weakening	2
Saturation Breakpoint 4 (05.063)	Improved performance with flux weakening	2
Motor and Load Inertia (03.018)	Frequency controller set-up and torque feed-forwards	3
Current Controller Kp Gain (04.013)	Basic control	1, 2
Current Controller Ki Gain (04.014)	Basic control	1, 2

Auto-tune test 1: Basic control parameters
This test measures the basic control parameters without moving the motor.

1. A stationary test is performed to measure *Stator Resistance* (05.017), *Transient Inductance* (05.024), *Maximum Deadtime Compensation* (05.059) and *Current At Maximum Deadtime Compensation* (05.060).
2. *Stator Resistance* (05.017) and *Transient Inductance* (05.024) are used to set up *Current Controller Kp Gain* (04.013) and *Current Controller Ki Gain* (04.014). This is only performed once during the test, and so the user can make further adjustments to the current controller gains if required.

Auto-tune test 2: Basic control and improved performance parameters
This test measures the parameters for improved performance by rotating the motor.

1. Auto-tune 1 test is performed.
2. A rotating test is performed in which the motor is accelerated with the currently selected ramps up to a frequency of *Motor Rated Frequency* (05.006) x 2/3, and the frequency is maintained at that level for up to 40 seconds. *Stator Inductance* (05.025) is measured and this value is used in conjunction with other motor parameters to calculate *Motor Rated Power Factor* (05.010). *Saturation Breakpoint 1* (05.029), *Saturation Breakpoint 3* (05.030), *Saturation Breakpoint 2* (05.062) and *Saturation Breakpoint 4* (05.063) are measured. The motor should be unloaded for this test.

Auto-tune test 3: Mechanical load measurement
A series of progressively larger torque levels are applied to the motor (20%, 40% ... 100% of rated torque) to accelerate the motor up to 3/4 x *Motor Rated Speed* (05.008) to determine the inertia from the acceleration/deceleration time. The test attempts to reach the required speed within 5s, but if this fails the next torque level is used. When 100% torque is used the test allows 60s for the required speed to be reached, but if this is unsuccessful a trip is initiated. To reduce the time taken for the test it is possible to define the level of torque to be used for the test by setting *Mechanical Load Test Level* (05.021) to a non-zero value. When the test level is defined the test is only carried out at the defined test level and 60s is allowed for the motor to reached the required speed. It should be noted that if the maximum speed allows for flux weakening then it may not be possible to achieve the required torque level to accelerate the motor fast enough. If this is the case, the maximum speed reference should be reduced.

1. The motor is accelerated in the required direction up to 3/4 of the maximum speed reference and then decelerated to zero speed.
2. The test is repeated with progressively higher torques until the required speed is reached.
3. The motor must be stationary at the start of the test.

The table below shows the trips that can occur during an auto-tune test:

Trip	Reason	Trip can occur in test
Autotune Stopped	The final drive enable or the final drive run were removed before the test was completed.	All
Resistance	The measured value of *Stator Resistance* (05.017) exceeded the range of the parameter.	1, 2
Autotune 3	The measured inertia exceeds the parameter range.	3

Parameter	05.013 *Flux Optimisation Select*		
Short description	Set to 1 to enable Flux Optimisation		
Mode	RFC-A		
Minimum	0	Maximum	1
Default	0	Units	
Type	8 Bit User Save	Update Rate	Background read
Display Format	Standard	Decimal Places	0
Coding	RW		

If *Flux Optimisation Select, Dynamic V To F Select* (05.013) = 1, the flux is reduced so that the *Magnetising Current* (04.017) is equal to

the *Torque Producing Current* (04.002) to optimise copper losses and reduce iron losses in the motor under low load conditions. The steady state range of the *Magnetising Current* (04.017) is limited between I_{MRated} / 2 and I_{Mrated}.

Parameter	**05.015** ***Low Frequency Voltage Boost***		
Short description	Defines the level of voltage boost at 0Hz when using a fixed V to F relationship		
Mode	RFC-A		
Minimum	0.0	Maximum	25.0
Default	3.0	Units	%
Type	16 Bit User Save	Update Rate	Background read
Display Format	Standard	Decimal Places	1
Coding	RW, BU		

* 3.0% up to Size D, 2.0% for Size 7 and 8, and 1.0% for larger sizes

During auto-tune test 2 the drive uses the Open-loop mode control strategy with fixed voltage boost. *Low Frequency Voltage Boost* (05.015) is used to define the level of low voltage boost used during the test. See *Open-loop Voltage Mode* (05.014) on Open-loop mode for more details.

Parameter	**05.017** ***Stator Resistance***		
Short description	Defines the resistance of the motor stator		
Mode	RFC-A		
Minimum	0.0000	Maximum	99.9999
Default	0.0000	Units	Ω
Type	32 Bit User Save	Update Rate	Background read
Display Format	Standard	Decimal Places	4
Coding	RW, RA		

The *Stator Resistance* (05.017), *Transient Inductance* (05.024) and *Stator Inductance* (05.025) are derived from the star connected per phase equivalent circuit of an induction motor shown below.

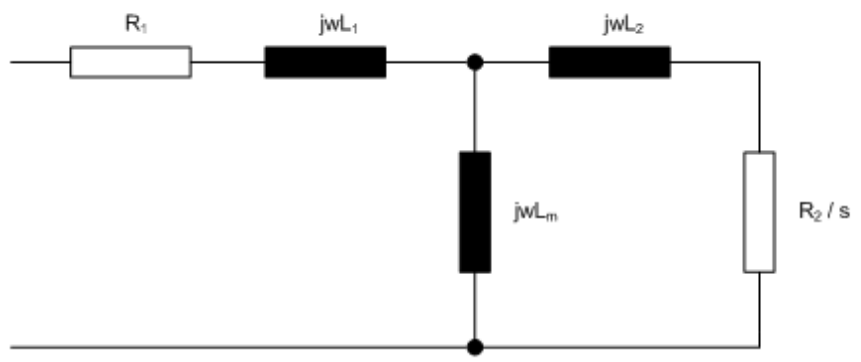

Fig.5.6: Steady state per phase star connected equivalent circuit of an induction motor

The steady state parameters are converted to equivalent transient model parameters:

$R_s = R_1$

$L_m = L_m$

$L_s = L_1 + L_m$

$L_r = L_2 + L_m$

$\sigma L_s = L_s - (L_m^2 / L_r)$

The equivalent drive parameters are:

Stator Resistance (05.017) = R_s

Transient Inductance (05.024) = σLs

Stator Inductance (05.025) = L_s

Parameter	05.018 *Maximum Switching Frequency*		
Short description	Defines the maximum switching frequency that can be used by the drive		
Mode	RFC-A		
Minimum	−VM_MAX_SWITCHING_FREQUENCY	Maximum	VM_MAX_SWITCHING_FREQUENCY
Default	3	Units	kHz
Type	8 Bit User Save	Update Rate	Background read
Display Format	Standard	Decimal Places	0
Coding	RW, TE, VM, RA		

Value	*Text*	*Description*
2	2	2kHz switching frequency
3	3	3kHz switching frequency
4	4	4kHz switching frequency
5	6	6kHz switching frequency
6	8	8kHz switching frequency
7	12	12kHz switching frequency
8	16	16kHz switching frequency

Maximum Switching Frequency (05.018) should be set to the required PWM switching frequency. The drive inverter will operate at this frequency unless *Auto-switching Frequency Change Disable* (05.035) = 0 and the inverter temperature exceeds the threshold for automatic switching frequency reduction (see *Inverter Temperature* (07.034)). The actual switching frequency is shown in *Switching Frequency* (05.037). The switching frequency has a direct effect on the sample rate for the current controllers (see *Current Controller Kp Gain* (04.013)). All other control tasks are at a fixed rate of 1ms.

As default *Auto-switching Frequency Change Disable* (05.035) = 0 and the system described above is always active. If *Auto-switching Frequency Change Disable* (05.035) = 1 then the automatic switching frequency changing system is disabled.

We recommend that a minimum ratio of 12:1 for the switching frequency compared to the maximum output frequency is used.

Parameter	05.021 *Mechanical Load Test Level*		
Short description	Mechanical Load Test Level		
Mode	RFC-A		
Minimum	0	Maximum	100
Default	0	Units	%
Type	8 Bit User Save	Update Rate	Background Read
Display Format	Standard	Decimal Places	0
Coding	RW		

See *Auto-tune* (05.012).

Parameter	05.024 *Transient Inductance*		
Short description	Defines the inducatance of the transient components in the motor stator		
Mode	RFC-A		
Minimum	0.000	Maximum	500.000
Default	0.000	Units	mH
Type	32 Bit User Save	Update Rate	Background read
Display Format	Standard	Decimal Places	3
Coding	RW, RA		

See *Stator Resistance* (05.017).

Parameter	05.025 *Stator Inductance*		
Short description	Defines the inductance of the motor stator		
Mode	RFC-A		
Minimum	0.00	Maximum	5000.00
Default	0.00	Units	mH
Type	32 Bit User Save	Update Rate	Background read
Display Format	Standard	Decimal Places	2
Coding	RW, RA		

See *Stator Resistance* (05.017).

Parameter	05.026 *High Dynamic Performance Enable*		
Short description	Set to 1 to enable slip compensation		
Mode	RFC-A		
Minimum	0	Maximum	1
Default	0	Units	
Type	1 Bit User Save	Update Rate	Background read
Display Format	Standard	Decimal Places	0
Coding	RW		

Whatever the value of *High Dynamic Performance Enable* (05.026) a feed-forward term based on the estimated level of flux in the motor and the motor speed is used to improve the performance of the current controllers and to avoid transients during spinning start. However, if *High Dynamic Performance Enable* (05.026) = 1 additional feed-forward terms are provided to remove the effects of cross-coupling between the flux and torque axes. This improves the performance of the current controllers under dynamic conditions at high frequencies.

Parameter	**05.028 *Flux Control Compensation Disable***		
Short description	Set to 1 to disable Flux Control Compensation		
Mode	RFC-A		
Minimum	0	Maximum	0
Default	0	Units	
Type	1 Bit User Save	Update Rate	Background read
Display Format	Standard	Decimal Places	0
Coding	RW		

If *Flux Control Compensation Disable* (05.028) = 0 the conversion from the *Final Torque Reference* (04.003) to *Final Current Reference* (04.004) takes into account the reduction in flux above base speed by increasing the current demand in order to keep the torque in the motor as requested. This is the preferred method of control as it ensures that the gain of the system remains constant in frequency control mode and it gives the correct relationship between torque and current in torque control modes. However, it is possible to get instability in frequency control mode when flux is weak at high speed, which may be caused by the *Motor Rated Speed* (05.008) being set to an incorrect value. If *Flux Control Compensation Disable* (05.028) = 1 the compensation for flux level is disabled which can sometimes prevent instability under these conditions.

Parameter	**05.029 *Saturation Breakpoint 1***		
Short description	Defines Saturation Breakpoint 1 within the saturation characteristic		
Mode	RFC-A		
Minimum	0.0	Maximum	100.0
Default	50.0	Units	%
Type	16 Bit User Save	Update Rate	Background read
Display Format	Standard	Decimal Places	1
Coding	RW		

The relationship between the *Magnetising Current* (04.017) and the motor flux is non-linear because of saturation. For accurate control of torque and good dynamic performance when flux weakening is active it is important that the control system can estimate the flux level from the *Magnetising Current* (04.017). The saturation characteristic is provided with a set of breakpoints as shown below.

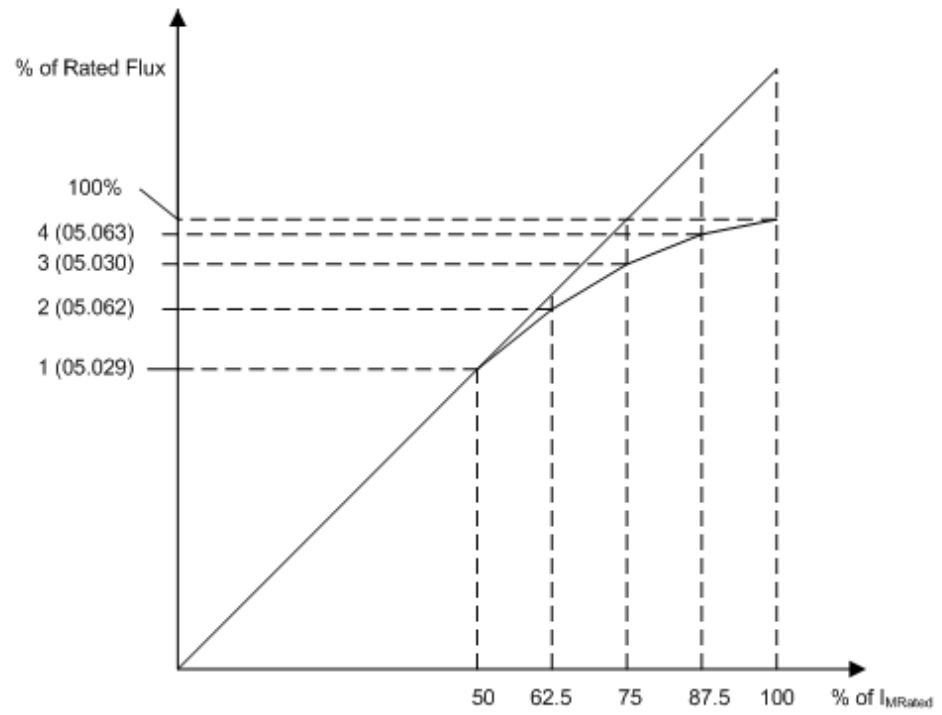

Fig.5.8: Motor saturation characteristic

The default values for the breakpoints are *Saturation Breakpoint 1* (05.029) = 50.0%, *Saturation Breakpoint 2* (05.062) = 0.0%, *Saturation Breakpoint 3* (05.030) = 75.0% and *Saturation Breakpoint 4* (05.063) = 0.0%. For compatibility with Unidrive SP, *Saturation Breakpoint 2* (05.062) and *Saturation Breakpoint 4* (05.063) are ignored if they are left at their default values of 0.0%. Therefore the default values give a linear relationship between the *Magnetising Current* (04.017) and the flux. The required values are not normally available from the motor manufacturer and should be obtained by auto-tuning.

Parameter	05.030 *Saturation Breakpoint 3*		
Short description	Defines Saturation Breakpoint 3 within the saturation characteristic		
Mode	RFC-A		
Minimum	0.0	Maximum	100.0
Default	75.0	Units	%
Type	16 Bit User Save	Update Rate	Background read
Display Format	Standard	Decimal Places	1
Coding	RW		

See *Saturation Breakpoint 1* (05.029).

Parameter	05.031 *Voltage Controller Gain*		
Short description	Defines the proportional gain of the d.c. link voltage controller		
Mode	RFC-A		
Minimum	1	Maximum	30
Default	1	Units	
Type	8 Bit User Save	Update Rate	Background read
Display Format	Standard	Decimal Places	0
Coding	RW		

Voltage Controller Gain (05.031) can be used to modify the proportional gain of the d.c. link voltage controller used for standard ramp and supply loss control.

Parameter	05.032 *Torque Per Amp*		
Short description	Displays the calculated value of kt for the attached motor		
Mode	RFC-A		
Minimum	0.00	Maximum	500.00
Default		Units	Nm/A
Type	16 Bit Volatile	Update Rate	Background write
Display Format	Standard	Decimal Places	2
Coding	RO, ND, NC, PT, BU		

Torque Per Amp (05.032) is automatically calculated from the motor parameters assuming a motor efficiency of 90%.

Torque Per Amp (05.032) = Estimated rated shaft power / [((*Motor Rated Speed* x 2π) / 60) x I_{TRated}]

where

I_{Trated} is the rated torque producing current (see *Torque Producing Current* (04.002)) and

Estimated rated shaft power = √3 x *Motor Rated Voltage* (05.009) x *Motor Rated Current* (05.007) x *Motor Rated Power Factor* (05.010) x 0.9

Torque Per Amp (05.032) is used in the automatic calculation of the speed controller gains.

Parameter	05.034 *Percentage Flux*		
Short description	Displays the flux level in the motor		
Mode	RFC-A		
Minimum	0.0	Maximum	150.0
Default		Units	%
Type	16 Bit Volatile	Update Rate	Background write
Display Format	Standard	Decimal Places	1
Coding	RO, FI, ND, NC, PT		

Percentage Flux (05.034) gives an indication of the flux level in the motor where a value of 100% is equivalent to the rated flux level for the motor.

Parameter	05.035 *Auto-switching Frequency Change Disable*		
Short description	Set to 1 to prevent the drive from changing between switching frequencies		
Mode	RFC-A		
Minimum	0	Maximum	1
Default	0	Units	
Type	8 Bit User Save	Update Rate	Background read
Display Format	Standard	Decimal Places	0
Coding	RW		

See *Maximum Switching Frequency* (05.018).

Parameter	05.037 *Switching Frequency*		
Short description	Displays the current switching frequency used by the drive		
Mode	RFC-A		
Minimum	−VM_MAX_SWITCHING_FREQUENCY	Maximum	VM_MAX_SWITCHING_FREQUENCY
Default		Units	kHz
Type	8 Bit Volatile	Update Rate	Background write
Display Format	Standard	Decimal Places	0
Coding	RO, TE, VM, ND, NC, PT		

Value	*Text*	*Description*
2	2	2kHz switching frequency
3	3	3kHz switching frequency
4	4	4kHz switching frequency
5	6	6kHz switching frequency
6	8	8kHz switching frequency
7	12	12kHz switching frequency
8	16	16kHz switching frequency

See *Maximum Switching Frequency* (05.018).

Parameter	05.038 *Minimum Switching Frequency*		
Short description	Defines the minimum switching frequency that can be used by the drive		
Mode	RFC-A		
Minimum	−VM_MAX_SWITCHING_FREQUENCY	Maximum	VM_MAX_SWITCHING_FREQUENCY
Default	2	Units	kHz
Type	8 Bit User Save	Update Rate	Background read
Display Format	Standard	Decimal Places	0
Coding	RW, TE, VM, RA		

Value	*Text*	*Description*
2	2	2kHz switching frequency
3	3	3kHz switching frequency
4	4	4kHz switching frequency
5	6	6kHz switching frequency
6	8	8kHz switching frequency
7	12	12kHz switching frequency
8	16	16kHz switching frequency

Minimum Switching Frequency (05.038) defines the minimum frequency limit used if the inverter thermal model is actively reducing the switching frequency due to temperature.
Note that parameter *Maximum Switching Frequency* (05.018) takes priority over parameter *Minimum Switching Frequency* (05.038) so is not limited by parameter *Minimum Switching Frequency* (05.038). The actual minimum switching frequency limit used is the lower of *Maximum Switching Frequency* (05.018) and *Minimum Switching Frequency* (05.038).

Parameter	05.040 *Spin Start Boost*		
Short description	Defines the level of spin start boost used by the algorithm that detects the speed of a spinning motor		
Mode	RFC-A		
Minimum	0.0	Maximum	10.0
Default	1.0	Units	
Type	8 Bit User Save	Update Rate	Background write
Display Format	Standard	Decimal Places	1
Coding	RW		

Spin Start Boost (05.040) is used by the algorithm that detects the frequency of a spinning motor when the drive is enabled and *Catch A Spinning Motor* (06.009) ≥ 1. For smaller motors the default value of 1.0 is suitable, but for larger motors *Spin Start Boost* (05.040) may need to be increased. If *Spin Start Boost* (05.040) is too small the drive will detect zero speed whatever the frequency of the motor, and if *Spin Start Boost* (05.040) is too large the motor may accelerate away from standstill when the drive is enabled.

Parameter	05.042 *Reverse Output Phase Sequence*		
Short description	Set to 1 to reverse the sequence on the output phases		
Mode	RFC-A		
Minimum	0	Maximum	1
Default	0	Units	
Type	1 Bit User Save	Update Rate	Background read
Display Format	Standard	Decimal Places	0
Coding	RW		

If *Reverse Output Phase Sequence* (05.042) = 0 the output phase sequence is U-V-W when *Output Frequency* (05.001) is positive and W-V-U when *Output Frequency* (05.001) is negative. If *Reverse Output Phase Sequence* (05.042) = 1 the output phase sequence is reversed so that the phase sequence in W-V-U for positive frequencies and U-V-W for negative frequencies.

Parameter	05.059 *Maximum Deadtime Compensation*		
Short description	Maximum Deadtime Compensation		
Mode	RFC-A		
Minimum	0.000	Maximum	10.000
Default	0.000	Units	µs
Type	16 Bit User Save	Update Rate	Background Read
Display Format	Standard	Decimal Places	3
Coding	RO, NC, PT		

Maximum Deadtime Compensation (05.059) is the deadtime compensation used to compensate for dead-time effects in the inverter. This level of compensation is used when the drive output current is above *Current At Maximum Deadtime Compensation* (05.060) Both of these values related to dead-time compensation are measured during auto-tuning and cannot be set by the user. It should be noted that if the auto-tuning test is not performed and *Maximum Deadtime Compensation* (05.059) = 0 then dead-time compensation is disabled. Although it is not recommended, it is possible to disable dead-time compensation by setting *Disable Deadtime Compensation* (05.061) = 1.

Parameter	05.060 *Current At Maximum Deadtime Compensation*		
Short description	Current at which maximum deadtime compensation is applied		
Mode	RFC-A		
Minimum	0.00	Maximum	100.00
Default	0.00	Units	%
Type	16 Bit User Save	Update Rate	Background Read
Display Format	Standard	Decimal Places	2
Coding	RO, NC, PT		

See *Maximum Deadtime Compensation* (05.059).

Parameter	05.061 *Disable Deadtime Compensation*		
Short description	Disable Deadtime Compensation		
Mode	RFC-A		
Minimum	0	Maximum	1
Default	0	Units	
Type	1 Bit User Save	Update Rate	Background Read
Display Format	Standard	Decimal Places	0
Coding	RW		

See *Maximum Deadtime Compensation* (05.059).

Parameter	05.062 *Saturation Breakpoint 2*		
Short description	Defines Saturation Breakpoint 2 within the saturation characteristic		
Mode	RFC-A		
Minimum	0.0	Maximum	100.0
Default	0.0	Units	%
Type	16 Bit User Save	Update Rate	Background read
Display Format	Standard	Decimal Places	1
Coding	RW		

See *Saturation Breakpoint 1* (05.029).

Parameter	05.063 *Saturation Breakpoint 4*		
Short description	Defines Saturation Breakpoint 4 within the saturation characteristic		
Mode	RFC-A		
Minimum	0.0	Maximum	100.0
Default	0.0	Units	%
Type	16 Bit User Save	Update Rate	Background read
Display Format	Standard	Decimal Places	1
Coding	RW		

See *Saturation Breakpoint 1* (05.029).

Parameter	05.081 *Change to maximum drive switching frequency at low output current*		
Short description	Change to maximum drive switching frequency at low output current		
Mode	RFC-A		
Minimum	0	Maximum	1
Default	0	Units	
Type	1 Bit User Save	Update Rate	Background read
Display Format	Standard	Decimal Places	0
Coding	RW		

If the user has selected a maximum switching frequency in the range 2kHz to 6kHz, setting this parameter will cause the drive to switch to maximum

switching frequency at low output currents.

Swaps to 16kHz if the output current magnitude is less than 30% (Frame sizes 1-4) and 20% (Frame sizes 5 and above) of drive OI.AC level for a period longer than 100ms.

Swaps back immediately if the output current magnitude increases above the defined levels by more than 5%.

The original switching frequency may still be under the control of the inverter thermal model. This feature is disabled if the thermal model or user has changed the switching frequency within the last 10 seconds.

Parameter	**05.084** ***Low Frequency Estimator Threshold***		
Short description	Controls the RFC-A estimator threshold		
Mode	RFC-A		
Minimum	0.0	Maximum	100.0
Default	0.0	Units	%
Type	16 Bit User Save	Update Rate	Background read
Display Format	Standard	Decimal Places	1
Coding	RW		

If *Low Frequency Estimator Threshold, Low Frequency Torque adjustment* (05.084) = 0.0% (default) the RFC-A speed estimator is used when the ramp output is greater than the rated motor frequency divided by 64.
If *Low Frequency Estimator Threshold, Low Frequency Torque adjustment* (05.084) > 0.0% , the RFC-A speed estimator is used when the ramp output is greater than the rated motor frequency divided by 128.

Menu 6 Single Line Descriptions − *Sequencer and Clock*

Mode: RFC-A

Parameter		Range	Default	Type					
06.001	Stop Mode	Coast (0), Ramp (1), Ramp dc I (2), dc I (3), Timed dc I (4), Disable (5), No Ramp (6)	Ramp (1)	RW	Txt				US
06.002	Limit Switch Stop Mode	Stop (0), Ramp (1)	Ramp (1)	RW	Txt				US
06.003	Supply Loss Mode	Disable (0), Ramp Stop (1), Ride Thru (2), Limit Stop (3)	Disable (0)	RW	Txt				US
06.004	Start/Stop Logic Select	0 to 6	5	RW	Num				US
06.008	Hold Zero Frequency	Off (0) or On (1)	Off (0)	RW	Bit				US
06.009	Catch A Spinning Motor	Disable (0), Enable (1), Fwd Only (2), Rev Only (3)	Disable (0)	RW	Txt				US
06.010	Enable Conditions	000000000000 to 111111110111		RO	Bin	ND	NC	PT	
06.011	Sequencer State Machine Inputs	0000000 to 1111111		RO	Bin	ND	NC	PT	
06.012	Enable Stop Key	Off (0) or On (1)	Off (0)	RW	Bit				US
06.013	Enable Auxiliary Key	Disabled (0), Forward/Reverse (1), Run Reverse (2)	Disabled (0)	RW	Txt				US
06.014	Disable Auto Reset On Enable	Off (0) or On (1)	Off (0)	RW	Bit				US
06.015	Drive Enable	Off (0) or On (1)	On (1)	RW	Bit				US
06.016	Date	00-00-00 to 31-12-99		RW	Date	ND	NC	PT	
06.017	Time	00:00:00 to 23:59:59		RW	Time	ND	NC	PT	
06.018	Day Of Week	Sunday (0), Monday (1), Tuesday (2), Wednesday (3), Thursday (4), Friday (5), Saturday (6)		RO	Txt	ND	NC	PT	
06.019	Date/Time Selector	Set (0), Powered (1), Running (2), Acc Powered (3), Local Keypad (4), Remote Keypad (5), Slot 1 (6)	Powered (1)	RW	Txt				US
06.020	Date Format	Std (0), US (1)	Std (0)	RW	Txt				US
06.021	Time Between Filter Changes	0 to 30000 Hours	0 Hours	RW	Num				US
06.022	Filter Change Required / Change Done	Off (0) or On (1)		RW	Bit	ND	NC		
06.023	Time Before Filter Change Due	0 to 30000 Hours		RO	Num	ND	NC	PT	PS
06.024	Reset Energy Meter	Off (0) or On (1)	Off (0)	RW	Bit				
06.025	Energy Meter: MWh	±999.9 MWh		RO	Num	ND	NC	PT	PS
06.026	Energy Meter: kWh	±99.99 kWh		RO	Num	ND	NC	PT	PS
06.027	Energy Cost Per kWh	0.0 to 600.0	0.0	RW	Num				US
06.028	Running Cost	±32000		RO	Num	ND	NC	PT	
06.029	Hardware Enable	Off (0) or On (1)		RO	Bit	ND	NC	PT	
06.030	Run Forward	Off (0) or On (1)	Off (0)	RW	Bit		NC		
06.031	Jog Forward	Off (0) or On (1)	Off (0)	RW	Bit		NC		
06.032	Run Reverse	Off (0) or On (1)	Off (0)	RW	Bit		NC		
06.033	Forward/Reverse	Off (0) or On (1)	Off (0)	RW	Bit		NC		
06.034	Run	Off (0) or On (1)	Off (0)	RW	Bit		NC		
06.035	Forward Limit Switch	Off (0) or On (1)	Off (0)	RW	Bit		NC		
06.036	Reverse Limit Switch	Off (0) or On (1)	Off (0)	RW	Bit		NC		
06.037	Jog Reverse	Off (0) or On (1)	Off (0)	RW	Bit		NC		
06.038	User Enable	Off (0) or On (1)	On (1)	RW	Bit		NC		
06.039	Not Stop	Off (0) or On (1)	Off (0)	RW	Bit		NC		
06.040	Enable Sequencer Latching	Off (0) or On (1)	Off (0)	RW	Bit				US
06.041	Drive Event Flags	00 to 11	00	RW	Bin		NC		
06.042	Control Word	000000000000000 to 111111111111111	000000000000000	RW	Bin		NC		
06.043	Control Word Enable	0 to 1	0	RW	Num				US
06.045	Cooling Fan control	0 to 5	2	RW	Num				US
06.047	Input Phase Loss Detection Mode	Full (0), Ripple Only (1), Disabled (2)	Full (0)	RW	Txt				US
06.048	Supply Loss Detection Level	0 to VM_SUPPLY_LOSS_LEVEL V	110V drive: 205 V 200V drive: 205 V 400V drive: 410 V 575V drive: 540 V 690V drive: 540 V	RW	Num		RA		US
06.051	Hold Supply Loss Active	Off (0) or On (1)	Off (0)	RW	Bit		NC		
06.052	Motor Pre-heat Current Magnitude	0 to 100 %	0 %	RW	Num				US
06.058	Output Phase Loss Detection Time	0.5s (0), 1.0s (1), 2.0s (2), 4.0s (3)	0.5s (0)	RW	Txt				US
06.059	Output Phase Loss Detection Enable	Off (0) or On (1)	Off (0)	RW	Bit				US
06.060	Standby Mode Enable	Off (0) or On (1)	Off (0)	RW	Bit				US
06.061	Standby Mode Mask	0000 to 1111	0000	RW	Bin				US
06.071	Slow Rectifier Charge Rate Enable	Off (0) or On (1)	Off (0)	RW	Bit				US
06.073	Braking IGBT Lower Threshold	±VM_DC_VOLTAGE_SET V	110V drive: 390 V 200V drive: 390 V 400V drive: 780 V 575V drive: 930 V 690V drive: 1120 V	RW	Num		RA		US

06.074	Braking IGBT Upper Threshold	±VM_DC_VOLTAGE_SET V	110V drive: 390 V 200V drive: 390 V 400V drive: 780 V 575V drive: 930 V 690V drive: 1120 V	RW	Num		RA		US
06.075	Low Voltage Braking IGBT Threshold	±VM_DC_VOLTAGE_SET V	0 V	RW	Num		RA		US
06.076	Low Voltage Braking IGBT Threshold Select	Off (0) or On (1)	Off (0)	RW	Bit				
06.077	Low DC Link Operation	Off (0) or On (1)	Off (0)	RW	Bit				US
06.084	UTC Offset	±24.00 Hours	0.00 Hours	RW	Num				US

RW	Read / Write	RO	Read-only	Bit	Bit parameter	Txt	Text string	Date	Date parameter	Time	Time parameter
Chr	Character parameter	Bin	Binary parameter	IP	IP address	Mac	MAC address	Ver	Version number	SMP	Slot, menu, parameter
Num	Number parameter	DE	Destination	ND	No default value	RA	Rating dependent	NC	Non-copyable	PT	Protected
FI	Filtered	US	User save	PS	Power-down save						

Menu 6 − *Sequencer and Clock*

Mode: RFC-A

Sequencer

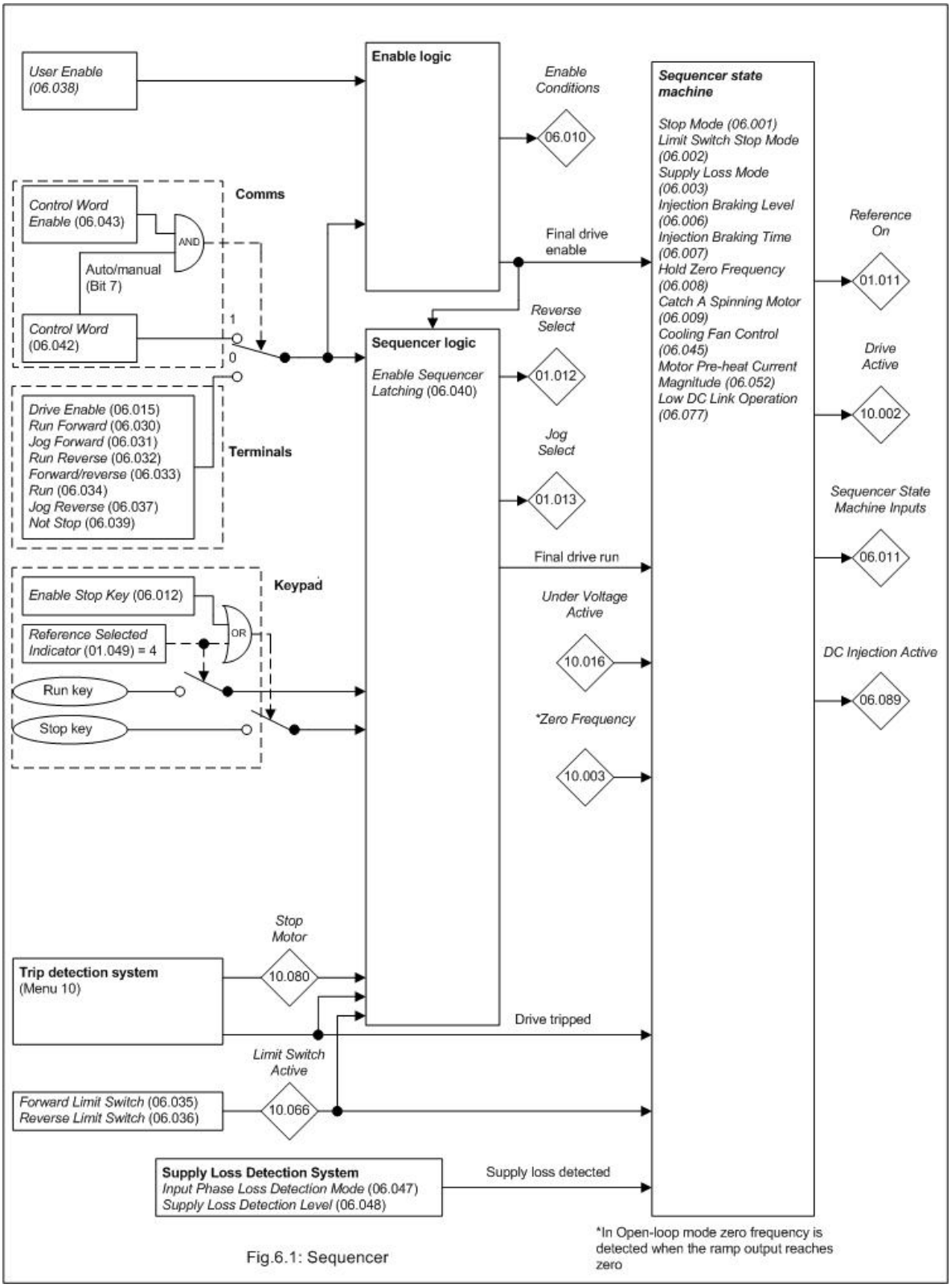

Fig.6.1: Sequencer

The sequencer, which provides overall control of the drive, is implemented in two stages. The first stage includes the enable logic and sequencer logic and consists of static logic elements. The second stage is a state machine with internal states.

Enable logic

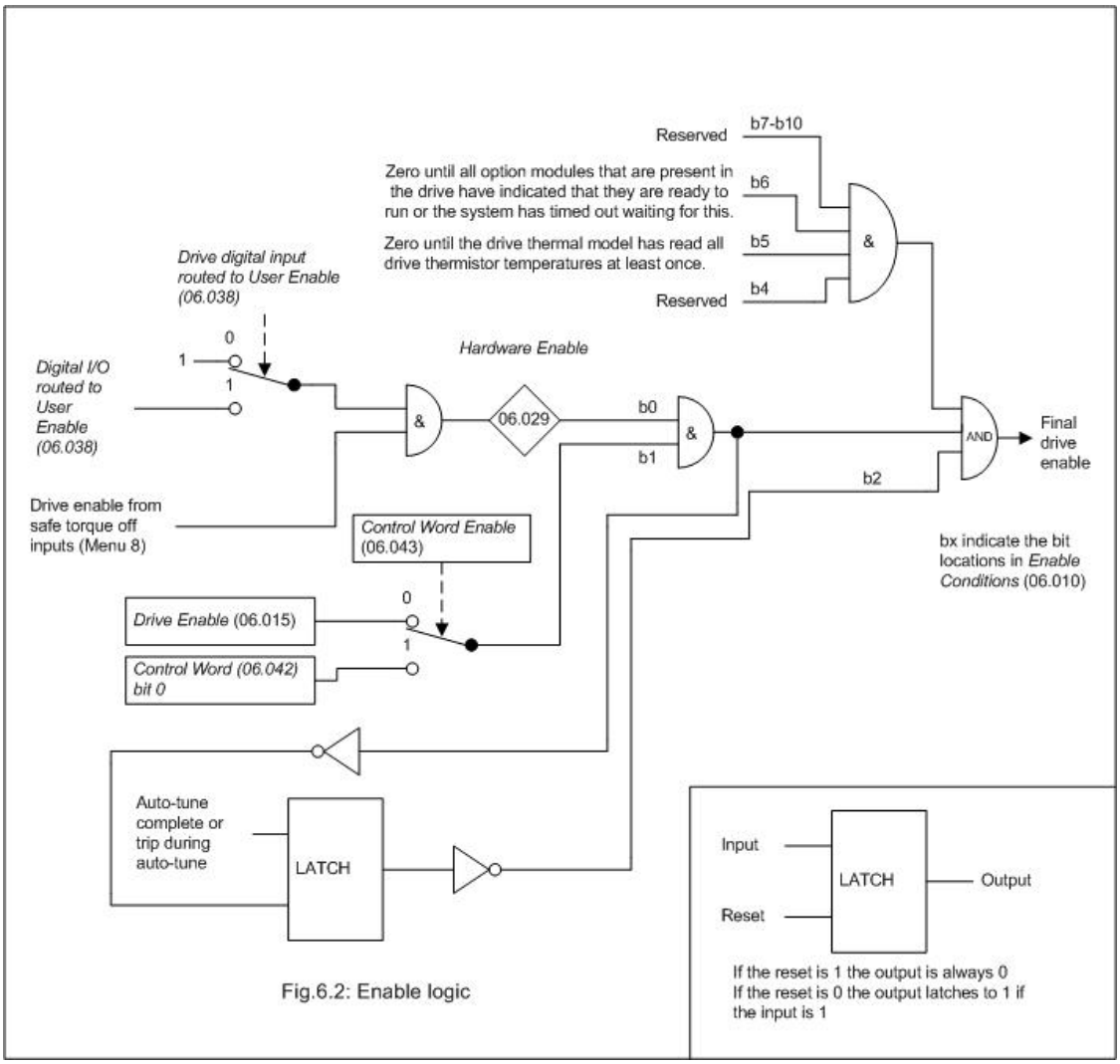

Fig.6.2: Enable logic

Hardware Enable (06.029) follows the safe torque off enable signal provided none of the digital inputs that are integral to the drive are routed to the *User Enable* (06.038). The safe torque off hardware includes a delay in detecting a change from the enable to disable state of up to 20ms, but for most applications this is not a problem.

If the safety function of the safe torque off input is required then there must not be a direct connection between the safe torque off input and any other digital I/O on the drive. If the safety function of the safe torque off input and a disable function are required together, then the drive should be given two separate independent enable input signals. A signal from a safe source should be connected to the safe torque off input on the drive. A second enable should be connected to the digital I/O selected for the disable function. The circuit must be arranged so that a fault which causes the digital input to be forced high cannot cause the safe torque off input to be forced high as well, including the case where a component such as a blocking diode has failed.

Sequencer logic

The diagram below shows the sequencer logic when *Reference Selected Indicator* (01.049) is not equal to 4 (i.e. keypad control mode is not selected). The definition of the logic symbols are given in Fig.6.5

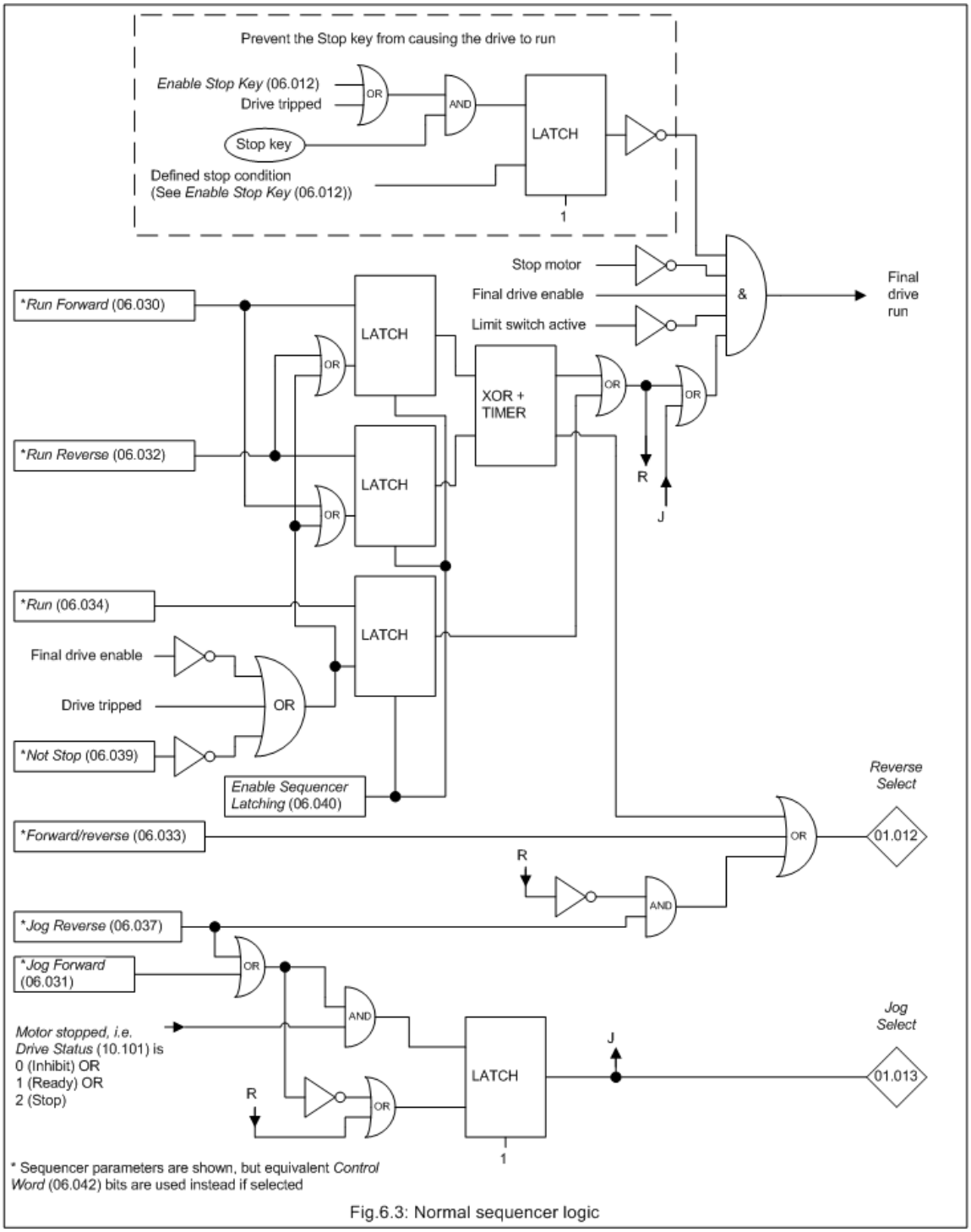

Fig.6.3: Normal sequencer logic

The diagram below shows the sequencer logic when *Reference Selected Indicator* (01.049) =4 (i.e. keypad control mode is selected). The definition of the logic symbols are given in Fig.6.7

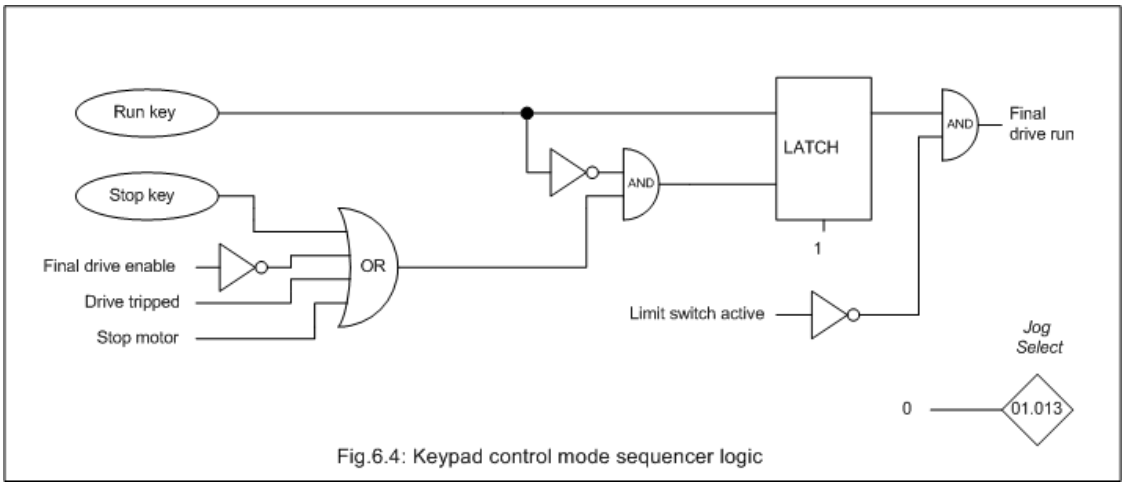

Fig.6.4: Keypad control mode sequencer logic

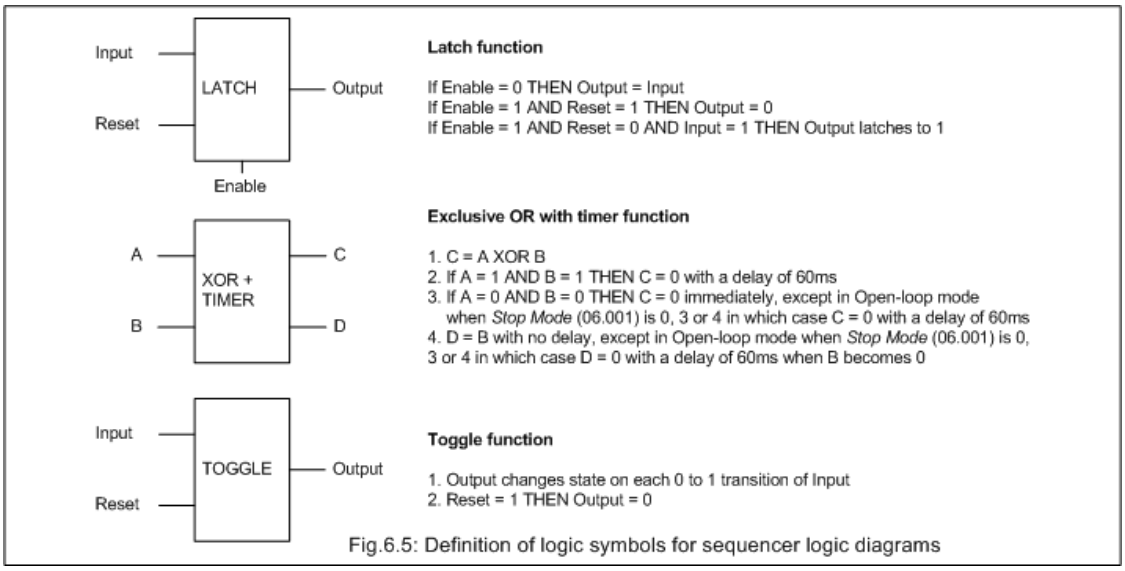

Fig.6.5: Definition of logic symbols for sequencer logic diagrams

Throughout this section reference is made to the sequencer bit parameters *Drive Enable* (06.015), *Run Forward* (06.030), *Jog Forward* (06.031), *Run Reverse* (06.032), *Forward/Reverse* (06.033), *Run* (06.034), *Jog Reverse* (06.037) and *Not Stop* (06.039). If *Control Word Enable* (06.043) = 1 and bit 7 (Auto/manual) in the *Control Word* (06.042) is 1 then the appropriate bits in the control word are used instead.

Parameter	**06.001 *Stop Mode***		
Short description	Defines how the motor is controlled when the run signal is removed from the drive		
Mode	RFC-A		
Minimum	0	Maximum	6
Default	1	Units	
Type	8 Bit User Save	Update Rate	Background read
Display Format	Standard	Decimal Places	0
Coding	RW, TE		

Value	***Text***	***Description***
0	Coast	Coast stop
1	Ramp	Ramp stop
2	Ramp dc I	Ramp stop + 1 second dc injection
3	dc I	Injection braking stop with detection of zero speed
4	Timed dc I	Timed injection braking stop
5	Disable	Disable
6	No Ramp	No ramp

There is only one phase during the stopping sequence as shown in the table below for each of the possible values of *Stop Mode* (06.001).

***Stop Mode* (06.001)**	**Description**
0: Coast	*Stop Mode* (06.001) = 0 (Coast) the inverter is inhibited immediately when the Final drive run is de-activated. If however, *Hold Zero Frequency* (06.008) = 1, then the inverter will be re-enabled to hold zero speed. The result is that the inverter is disabled for one sample and then enabled to ramp the motor to a stop. Therefore if coast stop is required *Hold Zero Frequency* (06.008) should be set to 0.
1: Ramp	If *Stop Mode* (06.001) = 1 (ramp) the relevant ramp rate is used to stop the motor even if *Ramp Enable* (02.002) = 0.
2: Ramp followed by d.c. injection	Same as 6.
3: D.c. injection with zero frequency detection	Same as 6.
4: Timed d.c. injection stop	Same as 6.
5: Disable	Inverter disabled
6: No ramp	Stop under current limit

Parameter	06.002 *Limit Switch Stop Mode*		
Short description	Defines the behaviour of the drive when limit switch is active		
Mode	RFC-A		
Minimum	0	Maximum	1
Default	1	Units	
Type	8 Bit User Save	Update Rate	Background read
Display Format	Standard	Decimal Places	0
Coding	RW, TE		

Value	*Text*
0	Stop
1	Ramp

If *Limit Switch Stop Mode* (06.002) = 0 then when *Limit Switch Active* (10.066) is activated the motor is stopped without ramps (under current limit control).

If *Limit Switch Stop Mode* (06.002) = 1 then the motor is stopped with the currently selected ramp rate.

Parameter	06.003 *Supply Loss Mode*		
Short description	Defines the behaviour of the drive when the supply voltage is reduced		
Mode	RFC-A		
Minimum	0	Maximum	3
Default	0	Units	
Type	8 Bit User Save	Update Rate	Background read
Display Format	Standard	Decimal Places	0
Coding	RW, TE		

Value	*Text*	*Description*
0	Disable	Disabled
1	Ramp Stop	Ramp stop
2	Ride Thru	Ride through
3	Limit Stop	Limit stop

If *Supply Loss Mode* (06.003) > 0 and the *D.c. Link Voltage* (05.005) falls below *Supply Loss Detection Level* (06.048) then the supply loss condition is detected. If *Supply Loss Mode* (06.003) = 2 (ride through) the supply loss system will attempt to control the *D.c. Link Voltage* (05.005) to a level just below the *Supply Loss Detection Level* (06.048) using a d.c. link voltage controller which provides a torque producing current reference to the current controllers to regulate the power flow into the d.c. link. Therefore *Current Controller Kp Gain* (04.013) and *Current Controller Ki Gain* (04.014) must be set up correctly for the application. When the supply is reapplied it must be at a level that is high enough for the *D.c. Link Voltage* (05.005) to rise above *Supply Loss Detection Level* (06.048) plus a hysteresis margin. This will disable the supply loss controller and the drive will return to normal operation. The table below gives the d.c. link voltage levels used by the supply loss detection system for different drive voltage ratings.

Voltage level	200V	400V	575V	690V
Supply loss d.c. link voltage control level	*Supply Loss Detection Level* (06.048) - 10V	*Supply Loss Detection Level* (06.048) - 20V	*Supply Loss Detection Level* (06.048) - 25V	*Supply Loss Detection Level* (06.048) - 25V
Voltage above which supply loss detection changes from active to inactive	*Supply Loss Detection Level* (06.048) +10V	*Supply Loss Detection Level* (06.048) + 15V	*Supply Loss Detection Level* (06.048) + 50V	*Supply Loss Detection Level* (06.048) + 50V

0: Disable
No supply loss detection is provided by monitoring the *D.c. Link Voltage* (05.005). The drive will continue to operate normally unless the under voltage condition is detected.

1: Ramp Stop
The action taken by the drive is the same as for ride through mode, except that the ramp down rate is at least as fast as the currently selected deceleration ramp and the drive will continue to decelerate and stop even if the supply is re-applied. If *Stop Mode* (06.001) = 3 or 4 (i.e. d.c. injection) the drive will use ramp mode to stop on loss of the supply. If *Stop Mode* (06.001) = 2 (i.e. ramp stop followed by injection) the drive will ramp to a stop and then attempt to apply d.c. injection. The ramp down rate is at least as fast as the currently selected deceleration ramp and the drive will continue to decelerate and stop even if the supply is re-applied. Once the sequencer state machine has reached the DISABLE state the drive can restart provided the necessary controls are still active to initiate a start.

2: Ride through
The drive attempts to control the d.c. link voltage to take energy from the motor and load inertia to ride through the Supply loss condition for as long as possible.

3: Limit Stop
The frequency reference is set to zero and the ramps are disabled allowing the drive to decelerate the motor to a stop under current limit. If the supply is re-applied while the motor is stopping any run signal is ignored until the motor has stopped. If the current limit value is set at a very low level the drive may trip UU before the motor has stopped. Once the sequencer state machine has reached the DISABLE state the drive can restart provided the necessary controls are still active to initiate a start.

Parameter	06.004 *Start/Stop Logic Select*		
Short description	Used to select the logic function of the drive input terminals		
Mode	RFC-A		
Minimum	0	Maximum	6
Default	5	Units	
Type	8 Bit User Save	Update Rate	Actioned on exit of edit mode and on drive reset
Display Format	Standard	Decimal Places	0
Coding	RW		

This parameter changes the functions of the input terminals which are normally associated with the enabling, starting and stopping the drive. This also writes to *Enable Sequencer Latching* (06.040) to enable and disable the input latches.

***Start/Stop Logic Select* (06.004)**	**Digital I/O 2 (M100 - M201) Terminal 11**	**Digital I/O 2 (M300- M400) Terminal 11**	**Digital Input 3 Terminal 12**	**Digital Input 4 Terminal 13**	*Enable Sequencer Latching* (06.040)
0 (default)	User Enable	Undefined	Run Forward	Run Reverse	0 (non-latching)
1	Not Stop	Not Stop	Run Forward	Run Reverse	1 (latching)
2	User Enable	Undefined	Run	Reverse	0 (non-latching)
3	Not Stop	Not Stop	Run	Reverse	1 (latching)
4	Not Stop	Not Stop	Run	Jog Forward	1 (latching)
5	User programmable	User programmable	Run Forward	Run Reverse	0 (non-latching)
6	User programmable	User programmable	User programmable	User programmable	User programmable

Start/Stop Logic Select (06.004), *Enable Sequencer Latching* (06.040), *Digital IO2 Source/Destination A* (08.022), *Digital Input 03 Destination A* (08.023) and *Digital Input 04 Destination A* (08.024) are also saved when this parameter is modified. Action will only occur if the drive is inactive. If the drive is active the parameter will return to its pre altered value on exit from edit mode. In mode 6 the user is free to assign the terminals as appropriate to their application.

Parameter	**06.008 *Hold Zero Frequency***		
Short description	Set to 1 to hold the motor at zero frequency		
Mode	RFC-A		
Minimum	0	Maximum	1
Default	0	Units	
Type	1 Bit User Save	Update Rate	16ms
Display Format	Standard	Decimal Places	0
Coding	RW		

If *Hold Zero Frequency* (06.008) = 0 the sequencer state machine goes to the DISABLE state and the inverter is disabled when the Final drive run is de-activated and the motor reaches standstill.

If *Hold Zero Frequency* (06.008) = 1 and *Motor Pre-heat Current Magnitude* (06.052) = 0% the sequencer state machine goes to the STOP state when the Final drive run is de-activated and the motor reaches standstill. The drive remains enabled with a frequency reference of zero. If *Motor Pre-heat Current Magnitude* (06.052) is set to a non-zero value it defines the current in the motor when the sequencer state machine is in the STOP state. This is intended for applications where there is no motor load at standstill, but motor current is required to prevent condensation in the motor when it is stopped. If the motor is not force cooled the motor cooling is less effective at standstill than when the motor is rotating, and so care should be taken not to damage the motor by leaving it at standstill for prolonged periods with a high level of current.

When in HEAT mode i.e. *Motor Pre-heat Current Magnitude* (06.052) is a non-zero value, the current used is a percentage of the motor rated current.

Parameter	**06.009 *Catch A Spinning Motor***		
Short description	Defines the behaviour of the drive when the drive is enabled whilst the motor is rotating		
Mode	RFC-A		
Minimum	0	Maximum	3
Default	0	Units	
Type	8 Bit User Save	Update Rate	Background read
Display Format	Standard	Decimal Places	0
Coding	RW, TE		

Value	***Text***
0	Disable
1	Enable
2	Fwd Only
3	Rev Only

If *Catch A Spinning Motor* (06.009) = 0 the *Post Ramp Reference* (02.001) is set to zero when the drive is started. This is suitable for applications where the motor is at standstill or rotating at a low speed when the drive is enabled. However, if *Catch A Spinning Motor* (06.009) > 0 the sensorless control algorithm will pre-load the *Post Ramp Reference* (02.001) in a similar way to the Open loop mode test and give a smooth start even if the motor is already spinning.

If *Catch A Spinning Motor* (06.009) > 0 a test is carried out to measure the frequency of the motor when the sequencer state machine enters the RUN state. The minimum time for the test is approximately 250ms, but this may be extended as time is allowed for the motor flux to build up based on the setting of the motor parameters including *Motor Rated Speed* (05.008) which should be set to approximately the correct value. The measured frequency is used to preset the *Post Ramp Reference* (02.001) and give a smooth start even if the motor is already spinning. The test is not carried out if the Final drive run is activated when the sequencer state machine is in the STOP state. For the test to be successful it is important that the motor parameters, especially the *Stator Resistance* (05.017), are set up correctly. For larger motors it may also be necessary for *Spin Start Boost* (05.040) to be increased from its default value of 1.0.

Restrictions can be placed on the direction of movement and the possible direction of the detected frequency as given in the table below.

***Catch A Spinning Motor* (06.009)**	**Function**
0	Catch a spinning motor disabled
1	Detect all possible frequencies
2	Detect positive frequencies only
3	Detect negative frequencies only

Parameter	**06.010 *Enable Conditions***		
Short description	Displays all the conditions needed to change the state of the final drive enable		
Mode	RFC-A		
Minimum	0 (Display: 000000000000)	Maximum	4087 (Display: 111111110111)
Default		Units	
Type	16 Bit Volatile	Update Rate	4ms
Display Format	Binary	Decimal Places	0
Coding	RO, ND, NC, PT		

The Final drive enable is a combination of the *Hardware Enable* (06.029), *Drive Enable* (06.015) and other conditions that can prevent the drive from being enabled. All of these conditions are shown as bits in *Enable Conditions* (06.010) as given in the table below.

***Enable Conditions* (06.010) bits**	**Enable condition**
0	*Hardware Enable* (06.029)
1	*Drive Enable* (06.015)
2	0 if auto tune completed or trip during auto-tune, but drive needs to be disabled and re-enabled
3	Reserved
4	Reserved
5	Zero until the drive thermal model has obtained temperatures from all drive thermistors at least once
6	Zero until all option modules that are present in the drive have indicated that they are ready to run or the system has timed out waiting for this.
7	Reserved
8-10	Reserved
11	Zero if the drive is in standby mode. See *Standby Mode Enable* (06.060)

Because of the limited number of segments on drives with an LED display, these drives will indicate the parameter value as a decimal value rather than a binary value.

Parameter	**06.011 *Sequencer State Machine Inputs***		
Short description	Displays the states of inputs into the sequencer state machine		
Mode	RFC-A		
Minimum	0 (Display: 0000000)	Maximum	127 (Display: 1111111)
Default		Units	
Type	8 Bit Volatile	Update Rate	4ms
Display Format	Binary	Decimal Places	0
Coding	RO, ND, NC, PT, BU		

The bits in *Sequencer State Machine Inputs* (06.011) show the state of the inputs to the sequencer state machine as given in the tables below:

***Sequencer State Machine Inputs* (06.011)** bits	**Signal**	**Indicates**
0	Final drive enable	The drive inverter is allowed to be enabled.
1	Final drive run	The motor can move away from standstill.
2	*Under Voltage Active* (10.016)	The under voltage condition has been detected.
3	*Zero Frequency* (10.003)	Indicated when the motor has stopped.
4	Drive tripped	The drive is tripped.
5	*Limit Switch Active* (10.066)	Limit switch is active
6	*Supply Loss* (10.015)	Supply loss condition has been detected.

Because of the limited number of segments on drives with an LED display, these drives will indicate the parameter value as a decimal value rather than a binary value.

Parameter	**06.012 *Enable Stop Key***		
Short description	Set to 1 to enable the use of the stop key		
Mode	RFC-A		
Minimum	0	Maximum	1
Default	0	Units	
Type	1 Bit User Save	Update Rate	Background read
Display Format	Standard	Decimal Places	0
Coding	RW		

The Stop key can be used to stop the drive if *Enable Stop Key* (06.012) = 1 or Keypad command is selected (see *Reference Selector* (01.014)).

If *Enable Stop Key* (06.012)= 0 and Keypad command is not selected. The Stop key is not active and can be used to initiate a drive reset without stopping the drive from running.

If *Enable Stop Key* (06.012) = 1 or Keypad command is selected, the drive reset can be initiated without stopping the drive by holding the Run key and then pressing the Stop key.

The Stop key is also used to reset the drive from the keypad.

It should be noted that if the drive is tripped and is then reset from any source other than the keypad Stop key then the drive may start immediately under the following conditions:

1. *Enable Sequencer Latching* (06.040) = 0, the Final drive enable is active and one of the sequencer bits (*Run Forward* (06.030), *Run Reverse* (06.032) or *Run* (06.034) is active.
2. *Enable Sequencer Latching* (06.040) = 1, the Final drive enable is active, *Not Stop* (06.039) is active and one of the sequencer bits (*Run Forward* (06.030), *Run Reverse* (06.032) or *Run* (06.034) is active.

The drive sequencer has been designed so that pressing the Stop key, whatever the value of *Enable Stop Key* (06.012) or the Command Selection, does not make the drive state change from stopped to running. As pressing the Stop key could reset a drive trip which could then restart the drive, the run output from the sequencer is held off until the following conditions are met when the drive is tripped and the Stop key is pressed.

1. *Run Forward* (06.030) = 0 and *Run Reverse* (06.032) = 0 and *Run* (06.034) = 0*
2. OR *Run Forward* (06.030) = 1 and *Run Reverse* (06.032) = 1 for at least 60ms*
3. OR The Final drive enable = 0
4. OR The sequencer is in the UNDER_VOLTAGE state
5. OR If *Enable Sequencer Latching* (06.040) = 1, *Not Stop* (06.039) = 0

* If *Enable Sequencer Latching* (06.040) = 1 then the state of these sequencer bits must be 0 at the output of their latches.

Once the necessary conditions have been met the drive can then be restarted by activating the necessary bits for a normal start.

Parameter	**06.013 *Enable Auxiliary Key***		
Short description	Defines the behaviour of the drive when the auxilliary button is pressed		
Mode	RFC-A		
Minimum	0	Maximum	2
Default	0	Units	
Type	8 Bit User Save	Update Rate	Background read
Display Format	Standard	Decimal Places	0
Coding	RW, TE		

Value	*Text*
0	Disabled
1	Forward/Reverse
2	Run Reverse

Unidrive KI remote keypad only.

If *Reference Selected Indicator* (01.049) = 4 then *Enable Auxiliary Key* (06.013) can be used to enable the Auxiliary key as a reverse key. If *Enable Auxiliary Key* (06.013) = 1 then each time the Auxiliary key is pressed *Reverse Select* (01.012) is toggled. If *Enable Auxiliary Key* (06.013) = 2 then the Auxiliary key behaves in a similar way to the Run key except that the drive runs in the reverse direction when it is pressed.

Parameter	**06.014** ***Disable Auto Reset On Enable***		
Short description	Set to 1 to disable auto reset on enable		
Mode	RFC-A		
Minimum	0	Maximum	1
Default	0	Units	
Type	1 Bit User Save	Update Rate	4ms
Display Format	Standard	Decimal Places	0
Coding	RW		

Trips are automatically reset on the application of an enable signal. This feature can be disabled using this parameter if *Disable Auto Reset On Enable* (06.014) = 1.

Parameter	**06.015** ***Drive Enable***		
Short description	Set to 1 to enable the drive		
Mode	RFC-A		
Minimum	0	Maximum	1
Default	1	Units	
Type	1 Bit User Save	Update Rate	4ms
Display Format	Standard	Decimal Places	0
Coding	RW, BU		

Drive Enable (06.015) must be active for the drive to be enabled. See Menu 06.

Parameter	**06.016** ***Date***		
Short description	Displays the current date		
Mode	RFC-A		
Minimum	0 (Display: 00-00-00)	Maximum	311299 (Display: 31-12-99)
Default		Units	
Type	32 Bit Volatile	Update Rate	Background read/write
Display Format	Date	Decimal Places	0
Coding	RW, ND, NC, PT		

Date (06.016), *Time* (06.017) and *Day Of Week* (06.018) show the date and time as selected by *Date/Time Selector* (06.019). *Date* (06.016) stores the date in dd.mm.yy format regardless of the setting made in *Date Format* (06.020) however if the parameter is viewed using a keypad the date will be displayed in the format selected in *Date Format* (06.020). If a real time clock is selected from an option module then the days, months and years are from the real time clock and the day of the week is displayed in *Day Of Week* (06.018). Otherwise the days have a minimum value of 0 and roll over after 30, the months have a minimum value of 0 and roll over after 11, and *Day Of Week* (06.018) is always 0 (Sunday).

If when setting the date/time this parameter is being written via comms then the value should be written in standard dd/mm/yy format as described below.

The value of this parameter as seen over comms is as follows.

Value = (day[1..31] x 10000) + (month[1..11] x 100) + year[0..99]

Parameter	**06.017** ***Time***		
Short description	Dispalys the current time		
Mode	RFC-A		
Minimum	0 (Display: 00:00:00)	Maximum	235959 (Display: 23:59:59)
Default		Units	
Type	32 Bit Volatile	Update Rate	Background read/write
Display Format	Time	Decimal Places	0
Coding	RW, ND, NC, PT		

See *Date* (06.016).

The value of this parameter as seen over comms is as follows.

Value = (hour[0..23] x 10000) + (minute[0..59] x 100) + seconds[0..59]

Parameter	**06.018** ***Day Of Week***		
Short description	Displays the current day of the week		
Mode	RFC-A		
Minimum	0	Maximum	6
Default		Units	
Type	8 Bit Volatile	Update Rate	Background write
Display Format	Standard	Decimal Places	0
Coding	RO, TE, ND, NC, PT		

Value	*Text*
0	Sunday
1	Monday
2	Tuesday
3	Wednesday
4	Thursday
5	Friday
6	Saturday

See *Date* (06.016).

Parameter	06.019 *Date/Time Selector*		
Short description	Defines which clock is used to display the current time, date and day of the week		
Mode	RFC-A		
Minimum	0	Maximum	6
Default	1	Units	
Type	8 Bit User Save	Update Rate	Background read
Display Format	Standard	Decimal Places	0
Coding	RW, TE		

Value	*Text*
0	Set
1	Powered
2	Running
3	Acc Powered
4	Local Keypad
5	Remote Keypad
6	Slot 1

Date/Time Selector (06.019) is used to select the drive date and time as shown in the table below.

Date/Time Selector (06.019)	Date/Time source
0: Set	Date and time parameters can be written by the user
1: Power	Time since the drive was powered up
2: Running	Accumulated drive running time since the drive was manufactured
3: Acc Power	Accumulated powered-up time since the drive was manufactured
4: Local Keypad	Reserved
5: Remote Keypad	If a keypad connected to the user comms port of a drive with a 485 port includes a real-time clock then the date/time from this clock is displayed, otherwise the date/time is set to zero
6: Slot 1	If an option module fitted to the drive contains a real-time clock then the date/time from this clock is displayed, otherwise the date/time is set to zero.

When *Date/Time Selector* (06.019) = 0 the *Date* (06.016) and *Time* (06.017) can be written by the user and the values in these parameters are transferred to the real time clocks in the keypad or any option modules that support this feature that are fitted to the drive. When *Date/Time Selector* (06.019) is changed to any other value, the real time clocks are allowed to run normally again. When *Date/Time Selector* (06.019) is changed from any value to 0 the date and time from a real time clock, if present, is automatically loaded into *Date* (06.016) and *Time* (06.017), so that this date and time is used as the initial value for editing. If more than one real time clock is present the date/time from the remote keypad is used, if present, and if not then the date/time from the option module slot.

Date (06.016) and *Time* (06.017) are used by the timers in Menu 09 and for time stamping trips. These features will continue to use the originally selected clock even if *Date/Time Selector* (06.019) is changed until a drive reset is initiated. If *Date/Time Selector* (06.019) has been changed and a reset is initiated *Timer 1 Repeat Function* (09.039) and *Timer 2 Repeat Function* (09.049) are set to zero to disable the timers, and the trip dates and times (10.041 to 10.060) are reset to zero.

Parameter	06.020 *Date Format*		
Short description	Defines if the US date format is used or not		
Mode	RFC-A		
Minimum	0	Maximum	1
Default	0	Units	
Type	8 Bit User Save	Update Rate	Background read
Display Format	Standard	Decimal Places	0
Coding	RW, TE		

Value	*Text*	*Description*
0	Std	Standard date format dd.mm.yy
1	US	US date format mm.dd.yy

Date Format (06.020) selects the display style for *Date* (06.016), *Timer 1 Start Date* (09.035), *Timer 1 Stop Date* (09.037), *Timer 2 Start Date* (09.045), *Timer 2 Stop Date* (09.047) and for the trip time stamping date parameters (*Trip 0 Date* (10.041), *Trip 1 Date* (10.043), *Trip 2 Date* (10.045), *Trip 3 Date* (10.047), *Trip 4 Date* (10.049), *Trip 5 Date* (10.051), *Trip 6 Date* (10.053), *Trip 7 Date* (10.055), *Trip 8 Date* (10.057), *Trip 9 Date* (10.059)) when displayed on a keypad connected to the drive. The format selection made in this parameter does not affect the value of these parameters if they are read using comms or by a user program.

If *Date Format* (06.020) is 0 then standard format is used and the date is displayed on the keypad as dd.mm.yy and if *Date Format* (06.020) is 1 then US format is used and the date is displayed on the keypad as mm.dd.yy.

Parameter	06.021 *Time Between Filter Changes*		
Short description	Defines the time between filter changes		
Mode	RFC-A		
Minimum	0	Maximum	30000
Default	0	Units	Hours
Type	16 Bit User Save	Update Rate	Background read
Display Format	Standard	Decimal Places	0
Coding	RW		

Time Between Filter Changes (06.021) should be set to a non-zero value to enable the filter change timer system. Each time *Filter Change Required / Change Done* (06.022) is changed by the user from 1 to 0 the value of *Time Between Filter Changes* (06.021) is copied to *Time Before Filter Change Due* (06.023). For each hour while *Drive Active* (10.002) = 1 the *Time Before Filter Change Due* (06.023) is reduced by 1 until it reaches zero. When *Time Before Filter Change Due* (06.023) changes from 1 to 0 *Filter Change Required / Change Done* (06.022) is set to 1 to indicate that a filter change is required. The filter should be changed and the system reset again by resetting *Filter Change Required / Change Done* (06.022) to 0.

Parameter	06.022 *Filter Change Required / Change Done*		
Short description	Set to 0 when a filter change has taken place		
Mode	RFC-A		
Minimum	0	Maximum	1
Default		Units	
Type	1 Bit Volatile	Update Rate	Background read/write
Display Format	Standard	Decimal Places	0
Coding	RW, ND, NC		

See *Time Between Filter Changes* (06.021).

Parameter	06.023 *Time Before Filter Change Due*		
Short description	Displays the time before a filter change is required		
Mode	RFC-A		
Minimum	0	Maximum	30000
Default		Units	Hours
Type	16 Bit Power Down Save	Update Rate	Background write
Display Format	Standard	Decimal Places	0
Coding	RO, ND, NC, PT		

See *Time Between Filter Changes* (06.021).

Parameter	06.024 *Reset Energy Meter*		
Short description	Set to 1 to reset the energy meter		
Mode	RFC-A		
Minimum	0	Maximum	1
Default	0	Units	
Type	1 Bit Volatile	Update Rate	Background read
Display Format	Standard	Decimal Places	0
Coding	RW		

Energy Meter: MWh (06.025) and *Energy Meter: kWh* (06.026) accumulate the energy transferred through the drive. A positive energy value indicates net transfer of energy from the drive to the motor. If *Reset Energy Meter* (06.024) = 1 then *Energy Meter: MWh* (06.025) and *Energy Meter: kWh* (06.026) are held at zero. If *Reset Energy Meter* (06.024) = 0 then the energy meter is enabled and will accumulate the energy flow. If the maximum or minimum of *Energy Meter: MWh* (06.025) is reached the parameter does not rollover and is instead clamped at the maximum or minimum value.

Parameter	06.025 *Energy Meter: MWh*		
Short description	Displays the energy accumulated by through the drive in MWh		
Mode	RFC-A		
Minimum	-999.9	Maximum	999.9
Default		Units	MWh
Type	16 Bit Power Down Save	Update Rate	Background write
Display Format	Standard	Decimal Places	1
Coding	RO, ND, NC, PT		

See *Reset Energy Meter* (06.024).

Parameter	06.026 *Energy Meter: kWh*		
Short description	Displays the energy accumulated by through the drive in kWh		
Mode	RFC-A		
Minimum	-99.99	Maximum	99.99
Default		Units	kWh
Type	16 Bit Power Down Save	Update Rate	Background write
Display Format	Standard	Decimal Places	2
Coding	RO, ND, NC, PT		

See *Reset Energy Meter* (06.024).

Parameter	06.027 *Energy Cost Per kWh*		
Short description	Defines the cost of energy per kWh		
Mode	RFC-A		
Minimum	0.0	Maximum	600.0
Default	0.0	Units	
Type	16 Bit User Save	Update Rate	Background read
Display Format	Standard	Decimal Places	1
Coding	RW		

Running Cost (06.028) is derived from the *Output Power* (05.003) and the *Energy Cost Per kWh* (06.027) in cost per hour. The sign of *Running Cost* (06.028) is the same as the sign of *Output Power* (05.003).

Parameter	06.028 *Running Cost*		
Short description	Displays the running cost of the drive		
Mode	RFC-A		
Minimum	-32000	Maximum	32000
Default		Units	
Type	16 Bit Volatile	Update Rate	Background write
Display Format	Standard	Decimal Places	0
Coding	RO, ND, NC, PT		

See *Energy Cost Per kWh* (06.027).

Parameter	06.029 *Hardware Enable*		
Short description	Set to 1 to enable the hardware of the drive		
Mode	RFC-A		
Minimum	0	Maximum	1
Default		Units	
Type	1 Bit Volatile	Update Rate	4ms
Display Format	Standard	Decimal Places	0
Coding	RO, ND, NC, PT, BU		

Hardware Enable (06.029) normally shows the hardware enable state based on the state of the safe torque off system. However, drive I/O can be routed to *User Enable* (06.038) to reduce the disable time. See description of the enable logic for more details.

Parameter	06.030 *Run Forward*		
Short description	Set to to give the drive a run forward signal		
Mode	RFC-A		
Minimum	0	Maximum	1
Default	0	Units	
Type	1 Bit Volatile	Update Rate	4ms
Display Format	Standard	Decimal Places	0
Coding	RW, NC		

If the command source is not the keypad or the control word (*Control Word* (06.042)), then *Run Forward* (06.030) can be used to make the Final drive run active and *Reverse Select* (01.012) = 0, i.e. to make the drive run in the forward direction. See description of sequencer logic for more details.

Parameter	06.031 *Jog Forward*		
Short description	Set to 1 to give the drive a jog forward signal		
Mode	RFC-A		
Minimum	0	Maximum	1
Default	0	Units	
Type	1 Bit Volatile	Update Rate	4ms
Display Format	Standard	Decimal Places	0
Coding	RW, NC		

If the command source is not the keypad or the control word (*Control Word* (06.042)), then *Jog Forward* (06.031) can be used to make the Final drive run active and *Jog Select* (01.013) = 1, i.e. to make the drive run using the jog reference and jog ramps rates. The jog function is disabled if the run is made active through the normal running sequencing bits. See description of sequencer logic for more details.

Parameter	06.032 *Run Reverse*		
Short description	Set to 1 to give the drive a run reverse signal		
Mode	RFC-A		
Minimum	0	Maximum	1
Default	0	Units	
Type	1 Bit Volatile	Update Rate	4ms
Display Format	Standard	Decimal Places	0
Coding	RW, NC		

If the command source is not the keypad or the control word (*Control Word* (06.042)), then *Run Reverse* (06.032) can be used to make the Final drive run active and *Reverse Select* (01.012) = 1, i.e. to make the drive run in the reverse direction. See description of sequencer logic for more details.

Parameter	06.033 *Forward/Reverse*		
Short description	Set to 1 to reverse the direction of the motor		
Mode	RFC-A		
Minimum	0	Maximum	1
Default	0	Units	
Type	1 Bit Volatile	Update Rate	4ms
Display Format	Standard	Decimal Places	0
Coding	RW, NC		

If the command source is not the keypad or the control word (*Control Word* (06.042)), then *Forward/Reverse* (06.033) can be used to force the state of *Reverse Select* (01.012). If *Forward/Reverse* (06.033) = 1 then *Reverse Select* (01.012) = 1. If *Forward/Reverse* (06.033) = 0 then *Reverse Select* (01.012) = 0 unless it is set to 1 by the rest of the normal run or jog logic. See description of sequencer logic for more details.

Parameter	06.034 *Run*		
Short description	Set to 1 to give the drive a run signal		
Mode	RFC-A		
Minimum	0	Maximum	1
Default	0	Units	
Type	1 Bit Volatile	Update Rate	4ms
Display Format	Standard	Decimal Places	0
Coding	RW, NC		

If the command source is not the keypad or the control word (*Control Word* (06.042)), then *Run* (06.034) can be used to make the Final drive run active, but not to affect the state of *Reverse Select* (01.012). Normally *Run* (06.034) would be used in conjunction with *Forward/Reverse* (06.033) if control of the direction is required. See description of sequencer logic for more details.

Parameter	06.035 *Forward Limit Switch*		
Short description	Set to 1 to activate the forward limit switch active signal and remove the Final drive run signal		
Mode	RFC-A		
Minimum	0	Maximum	1
Default	0	Units	
Type	1 Bit Volatile	Update Rate	1ms read
Display Format	Standard	Decimal Places	0
Coding	RW, NC		

Forward Limit Switch (06.035) and *Reverse Limit Switch* (06.036) can be used to activate the Limit switch active signal and remove the Final drive run signal. See description of sequencer logic for more details.

Condition	*Forward Limit Switch* (06.035)	*Reverse Limit Switch* (06.036)
Pre-ramp Reference (01.003) + * *Hard Frequency Reference* (03.022) > 0.00	Active	Not active
Pre-ramp Reference (01.003) + **Hard Frequency Reference* (03.022) < 0.00	Not active	Active
Pre-ramp Reference (01.003) + **Hard Frequency Reference* (03.022) = 0.00	Active	Active

* If *Hard Frequency Reference Select* (03.023) = 0 then the *Hard Frequency Reference* (03.022) is taken as 0

Forward Limit Switch (06.035) and *Reverse Limit Switch* (06.036) operate in a similar way to Open loop mode when Limit switch active becomes active. If *Limit Switch Stop Mode* (06.002) = 0 the motor is stopped without ramps (in current limit), otherwise it is stopped with the currently selected ramp rate. If a digital input that is integral to the drive is used the maximum delay is 2.5ms. The limit switches are direction dependant, so that the motor can rotate in a direction that allows the system to move away from the limit switch.

Parameter	06.036 *Reverse Limit Switch*		
Short description	Set to 1 to activate the reverse limit switch active signal and remove the Final drive run signal		
Mode	RFC-A		
Minimum	0	Maximum	1
Default	0	Units	
Type	1 Bit Volatile	Update Rate	1ms read
Display Format	Standard	Decimal Places	0
Coding	RW, NC		

See *Forward Limit Switch* (06.035).

Parameter	06.037 *Jog Reverse*		
Short description	Set to 1 to give the drive a jog reverse signal		
Mode	RFC-A		
Minimum	0	Maximum	1
Default	0	Units	
Type	1 Bit Volatile	Update Rate	4ms
Display Format	Standard	Decimal Places	0
Coding	RW, NC		

If the command source is not the keypad or the control word (*Control Word* (06.042)), then *Jog Reverse* (06.037) can be used to make the Final drive run active, *Jog Select* (01.013) = 1 and *Reverse Select* (01.012) = 1, i.e. to make the drive run using the jog reference and jog ramps rates in the reverse direction. The jog function is disabled if the run is made active through the normal running sequencing bits. See description of sequencer logic for more details.

Parameter	06.038 *User Enable*		
Short description	Used to Enable/Disable the drive from a terminal		
Mode	RFC-A		
Minimum	0	Maximum	1
Default	1	Units	
Type	1 Bit Volatile	Update Rate	4ms
Display Format	Standard	Decimal Places	0
Coding	RW, NC		

This parameter is ANDed with the STO logic to produce the combined *Hardware Enable* (06.029). A user must set this parameter as a destination from a digital input. The logic value of this parameter will be set to 1 if it has not been used as a destination which will permit the STO to solely control the *Hardware Enable* (06.029).

Parameter	06.039 *Not Stop*		
Short description	Set to 1 to reset the latched sequencer bits if sequencer latching is enabled		
Mode	RFC-A		
Minimum	0	Maximum	1
Default	0	Units	
Type	1 Bit Volatile	Update Rate	4ms
Display Format	Standard	Decimal Places	0
Coding	RW, NC		

If *Enable Sequencer Latching* (06.040) = 1 then the sequencer bits can be latched. *Not Stop* (06.039) should be used to reset the latched sequencer bits. If *Not Stop* (06.039) = 1 then the sequencer bits can be latched. If *Not Stop* (06.039) = 0 then the latches are cleared and their outputs are forced to zero which will de-activate the Final drive run. See description of sequencer logic for more details.

Parameter	06.040 *Enable Sequencer Latching*		
Short description	Set to 1 to enable sequencer latching		
Mode	RFC-A		
Minimum	0	Maximum	1
Default	0	Units	
Type	1 Bit User Save	Update Rate	4ms
Display Format	Standard	Decimal Places	0
Coding	RW		

See *Not Stop* (06.039).

Parameter	06.041 *Drive Event Flags*		
Short description	Displays certain actions that have occurred within the drive		
Mode	RFC-A		
Minimum	0 (Display: 00)	Maximum	3 (Display: 11)
Default	0 (Display: 00)	Units	
Type	8 Bit Volatile	Update Rate	Background write
Display Format	Binary	Decimal Places	0
Coding	RW, NC		

Drive Event Flags (06.041) indicates that certain actions have occurred within the drive as described below.

Bit	Corresponding event
0	Defaults loaded
1	Drive mode changed

Because of the limited number of segments on drives with an LED display, these drives will indicate the parameter value as a decimal value rather than a binary value.

Bit 0: Defaults loaded
The drive sets bit 0 when defaults have been loaded and the associated parameter save has been completed. The drive does not reset this flag except at power-up.

Bit 1: Drive mode changed
The drive sets bit 1 when the drive mode has changed and the associated parameter save has been completed. The drive does not reset this flag except at power-up.

Parameter	06.042 *Control Word*		
Short description	Controls the sequencer state machine inputs if the control word is enabled		
Mode	RFC-A		
Minimum	0 (Display: 000000000000000)	Maximum	32767 (Display: 111111111111111)
Default	0 (Display: 000000000000000)	Units	
Type	16 Bit Volatile	Update Rate	Bits 9,7-0: 4ms, Other bits: Background read
Display Format	Binary	Decimal Places	0
Coding	RW, NC		

If *Control Word Enable* (06.043) = 0 then *Control Word* (06.042) has no effect. If *Control Word Enable* (06.043) = 1 the bits in *Control Word* (06.042) are used instead of their corresponding parameters or to initiate drive functions as shown in the table below:

Bit	Corresponding paramter or function
0	*Drive Enable* (06.015)
1	*Run Forward* (06.030)
2	*Jog Forward* (06.031)
3	*Run Reverse* (06.032)
4	*Forward/Reverse* (06.033)
5	*Run* (06.034)
6	*Not Stop* (06.039)
7	Auto / manual
8	Analog / Preset reference
9	*Jog Reverse* (06.037)
10	Not used
11	Not used
12	Trip drive
13	Reset drive
14	Watchdog

Because of the limited number of segments on drives with an LED display, these drives will indicate the parameter value as a decimal value rather than a binary value.

Bits 0-7 and bit 9: Sequencer control
When Auto/manual bit (bit7) = 1 then bits 0 to 6 and bit 9 of the *Control Word* (06.042) become active. The equivalent parameters are not modified by these bits, but become inactive when the equivalent bits in the *Control Word* (06.042) are active. When the bits are active they replace the functions of the equivalent parameters.

Bit 8: Analogue/preset reference
The state of Analogue/Preset Reference (bit 8) is written continuously to *Reference Select Flag 2* (01.042). With default drive settings (i.e. *Reference Selector* (01.014) = 0) this selects *Analog Reference 1* (01.036) when bit 8 = 0 or *Preset Reference 1* (01.021) when bit8 = 1. If any other drive parameters are routed to *Reference Select Flag 2* (01.042) the value of this parameter is undefined.

Bit 10 and bit 11: Not used
The values of these bits have no effect on the drive.

Bit 12: Trip drive
If bit 12 = 1 then a *Control Word* trip is repeatedly initiated. The trip cannot be cleared until bit 12 = 0.

Bit 13: Reset drive
If bit 13 is changed from 0 to 1 a drive reset is initiated. Bit 13 does not modify *Drive Reset* (10.033).

Bit 14: Watchdog
A watchdog system can be enabled or serviced each time bit 14 is changed from 0 to 1. Once bit 14 has been changed from 0 to 1 to enable the watchdog, this must be repeated every 1s or else a *Watchdog* trip will be initiated. The watchdog is disabled when the trip occurs and must be re-enabled if required when the trip is reset.

Parameter	06.043 *Control Word Enable*		
Short description	Set to 1 to enable the control word		
Mode	RFC-A		
Minimum	0	Maximum	1
Default	0	Units	
Type	8 Bit User Save	Update Rate	4ms
Display Format	Standard	Decimal Places	0
Coding	RW		

See *Control Word* (06.042).

Parameter	06.045 *Cooling Fan control*		
Short description	Defines the maximum speed of the drive cooling fan		
Mode	RFC-A		
Minimum	0	Maximum	5
Default	2	Units	
Type	8 Bit User Save	Update Rate	Background read
Display Format	Standard	Decimal Places	0
Coding	RW		

Note: Size 1 drives only have a single fan speed and so some of the operational modes are not available.

If *Cooling Fan control* (06.045) = 0 the cooling fan in the drive is off.

Some option modules consume more power than others and so if one of the higher power consumption modules is fitted to the drive, the drive will trip *OHt Control* if *Stack Temperature* (07.004) is above an internally set threshold (drive power rating dependant), and the option module will be forced to go into standby.

If *Cooling Fan control* (06.045) = 1 the cooling fan in the drive is forced to run at full speed.

If *Cooling Fan control* (06.045) = 2 the cooling fan in the drive is controlled by the values of *Stack Temperature* (07.004) and *Current Magnitude* (04.001) . The fan will run at full speed for at least 20 seconds if *Stack Temperature* (07.004) is greater than a frame dependent threshold (60 °C for size 1 & 2 or 50 °C for size 3 & 4) or *Current Magnitude* (04.001) is greater than 75% of *Drive current rating* (11.068), otherwise the cooling fan is off. If neither of the above conditions are causing the fan to run, the fan will run at low speed if one of the higher power consumption option modules is fitted and *Stack Temperature* (07.004) is above the internally set threshold. The fan will not turn off until *Stack Temperature* (07.004) falls to 5°C below the internally set threshold.

If *Cooling Fan control* (06.045) = 3 is the same as *Cooling Fan control* (06.045) = 2 but the cooling fan never turns off but runs at low speed when full speed is not being called for. This mode is not available on size 1 and so if selected, mode 2 is used instead.

If *Cooling Fan control* (06.045) = 4 the cooling fan in the drive is at low speed continuously. This mode is not available on size 1 and so if selected, mode 1 is used instead.

If *Cooling Fan control* (06.045) = 5 is the same as *Cooling Fan control* (06.045) = 2 but with an additional lower temperature threshold that causes the fan to run at low speed if *Stack Temperature* (07.004) is above the lower threshold - "theatre mode". In some applications this may prevent the fan running at full speed and so keep the audible noise down to a minimum. This mode is not available on size 1 and so if selected, mode 2 is used instead.

Parameter	**06.047** ***Input Phase Loss Detection Mode***		
Short description	Defines how the input phase loss is detected		
Mode	RFC-A		
Minimum	0	Maximum	2
Default	0	Units	
Type	8 Bit User Save	Update Rate	Background read
Display Format	Standard	Decimal Places	0
Coding	RW, TE		

Value	***Text***
0	Full
1	Ripple Only
2	Disabled

Input phase loss is detected by monitoring the d.c. link voltage ripple which increases with load. When compared to normal operation, if an input phase is missing or there is excessive input phase imbalance the d.c. link ripple level is higher. The high ripple level is detected to initiate a *PH.Lo* trip. For drive sizes 8 and above an additional input phase loss detection is provided by direct monitoring of the supply voltages (*PH.Lo* trip). Unlike the d.c. voltage ripple based detection which can only operate when the drive is enabled and on load, the additional input phase loss detection can operate whether the drive is enabled or not. *Input Phase Loss Detection Mode* (06.047) defines the methods used for input phase loss detection provided by the drive.

***Input Phase Loss Detection Mode* (06.047)**	***Drive Active* (10.002) = 0**	***Drive Active* (10.002) = 1**
0	*Direct input phase loss detection	*Direct input phase loss detection D.c. link voltage ripple detection
1	*Direct input phase loss detection	D.c. link voltage ripple detection
2	No input phase loss detection	No input phase loss detection

*Frame sizes 8 and above

Input phase loss detection can be disabled when the drive is required to operate from a d.c. supply connected to the d.c. link or from a single phase supply. If the drive operates from a single phase supply or a supply with high levels of phase imbalanced under load the input stage and d.c. link thermal protection system may produce a *OHt dc bus* trip.

Parameter	**06.048** ***Supply Loss Detection Level***		
Short description	Defines the threshold for indicating when the supply loss condition is detected		
Mode	RFC-A		
Minimum	0	Maximum	VM_SUPPLY_LOSS_LEVEL
Default	See exceptions below	Units	V
Type	16 Bit User Save	Update Rate	Background read
Display Format	Standard	Decimal Places	0
Coding	RW, VM, RA		

Voltage	***Default Value***
110V	205
200V	205
400V	410
575V	540
690V	540

Defines the threshold for indicating when the supply loss condition is detected.

The threshold can be adjusted to higher levels using this parameter. If the value is reduced below the default value the default value is used by the drive. If the level is set too high so that supply loss detection becomes active under normal operating conditions, the motor will coast to a stop.

Parameter	**06.051** ***Hold Supply Loss Active***		
Short description	Hold Supply Loss Active		
Mode	RFC-A		
Minimum	0	Maximum	1
Default	0	Units	
Type	1 Bit Volatile	Update Rate	1ms read
Display Format	Standard	Decimal Places	0
Coding	RW, NC		

If supply loss is detected (i.e. *Supply Loss* (10.015) = 1) or *Hold Supply Loss Active* (06.051) = 1 the supply loss indication and the action taken on supply loss will be active. For example, *Hold Supply Loss Active* (06.051) can be controlled by an external rectifier or a Regen system (via a digital input) to prevent power from being taken from the supply if supply loss ride-through mode is being used until the input system is ready to provide power. This can allow for the charge system in an external rectifier to complete the charging, or it can allow a Regen system to become synchronised.

Parameter	**06.052** ***Motor Pre-heat Current Magnitude***		
Short description	Defines the current in the motor when the state machine is in the stop state		
Mode	RFC-A		
Minimum	0	Maximum	100
Default	0	Units	%
Type	8 Bit User Save	Update Rate	Background read
Display Format	Standard	Decimal Places	0
Coding	RW		

See *Hold Zero Frequency* (06.008).

Parameter	**06.058** ***Output Phase Loss Detection Time***		
Short description	Output Phase Loss Detection Time		
Mode	RFC-A		
Minimum	0	Maximum	3
Default	0	Units	
Type	8 Bit User Save	Update Rate	Background Read
Display Format	Standard	Decimal Places	0
Coding	RW, TE		

Value	*Text*
0	0.5s
1	1.0s
2	2.0s
3	4.0s

See *Output Phase Loss Detection Enable* (06.059).

Parameter	**06.059** ***Output Phase Loss Detection Enable***		
Short description	Set to 1 to enable output phase loss detection		
Mode	RFC-A		
Minimum	0	Maximum	1
Default	0	Units	
Type	1 Bit User Save	Update Rate	Background read
Display Format	Standard	Decimal Places	0
Coding	RW		

Output phase loss detection can be used to detect a disconnected motor phase if *Output Phase Loss Detection Enable* (06.059) is set to a non-zero value.

0: Disabled
Output phase loss detection is not active.

1: Enabled
A test is carried out each time the drive is enabled to run to check if all three phases are connected. If the test fails an *Out Phase Loss*.X trip is initiated where X indicates which phase is not connected (1 = U, 2 = V, 3 = W). It should be noted that this test is not carried out in Open-loop mode if "catch a spinning motor is enabled (i.e. *Catch A Spinning Motor* (06.009) > 0).

A test is also carried out while the drive is running. If the drive output frequency is above 4Hz and a phase is disconnected for the time specified by *Output Phase Loss Detection Time* (06.058) then a *Out Phase Loss*.4 trip is initiated. It should be noted that if the motor is operating at high speed and flux weakening is active so that the magnetising current is below half the rated level then output phase loss will not be detected. If the motor is heavily loaded when a phase is disconnected it is likely that the motor will stall and the drive output frequency may fall below 4Hz before output phase loss is detected.

Parameter	**06.060** ***Standby Mode Enable***		
Short description	Set to 1 enable standby mode		
Mode	RFC-A		
Minimum	0	Maximum	1
Default	0	Units	
Type	1 Bit User Save	Update Rate	Background read
Display Format	Standard	Decimal Places	0
Coding	RW		

If *Standby Mode Enable* (06.060) = 1 then the drive will go into the standby power state 20 seconds after the last key press and whenever *Drive Active* (10.002) = 0. In this state the LED on the front of the drive flashes 0.25s on and 2s off. And the following actions are taken as defined by the *Standby Mode Mask* (06.061). Actions are enabled by setting the appropriate bit to 1.

***Standby Mode Mask* (06.061) bits**	**Action**
0	NA
1	Instruct all keypads to go into their standby state
2	NA
3	Instruct the option module in option slot 1 to go into the standby power state

Because of the limited number of segments on drives with an LED display, these drives will indicate the parameter value as a decimal value rather than a binary value.

Parameter	**06.061** ***Standby Mode Mask***		
Short description	Defines the behaviour of standby mode		
Mode	RFC-A		
Minimum	0 (Display: 0000)	Maximum	15 (Display: 1111)
Default	0 (Display: 0000)	Units	
Type	8 Bit User Save	Update Rate	Background read
Display Format	Binary	Decimal Places	0
Coding	RW		

See *Standby Mode Enable* (06.060).

Parameter	**06.071** ***Slow Rectifier Charge Rate Enable***		
Short description	Set to 1 to reduce the charge rate of the d.c. bus		
Mode	RFC-A		
Minimum	0	Maximum	1
Default	0	Units	
Type	1 Bit User Save	Update Rate	Background read
Display Format	Standard	Decimal Places	0
Coding	RW		

For Frame size 07 and larger, which use a d.c. link charge system based on a half controlled thyristor input bridge, the rate at which the d.c. link is charged can be reduced by setting *Slow Rectifier Charge Rate Enable* (06.071) to one. This will reduce the charging current which may be required if significant additional capacitance is added to the d.c. link to prevent rupturing of input fuses.

Parameter	**06.073** ***Braking IGBT Lower Threshold***		
Short description	Defines the lowest level of the d.c. bus voltage where the braking IGBT becomes active		
Mode	RFC-A		
Minimum	−VM_DC_VOLTAGE_SET	Maximum	VM_DC_VOLTAGE_SET
Default	See exceptions below	Units	V
Type	16 Bit User Save	Update Rate	Background
Display Format	Standard	Decimal Places	0
Coding	RW, VM, RA		

Voltage	*Default Value*
110V	390
200V	390
400V	780
575V	930
690V	1120

Braking IGBT Lower Threshold (06.073) defines the lowest level of *D.c. Link Voltage* (05.005) where the braking IGBT will become active and *Braking IGBT Upper Threshold* (06.074) defines the level of *D.c. Link Voltage* (05.005) where the braking IGBT will be on continuously. When the braking IGBT is turned on it will remain on for at least 1ms. The braking IGBT on-time is defined by the thresholds and the d.c. link voltage as given in the table below where L = *Braking IGBT Lower Threshold* (06.073) and U = *Braking IGBT Upper Threshold* (06.074).

D.c. link voltage level	**On-time**
D.c. Link Voltage (05.005) < L	0%
L ≤ *D.c. Link Voltage* (05.005) ≤ U	[(*D.c. Link Voltage* (05.005) - L) / (U - L)] x 100%
D.c. Link Voltage (05.005) ≥ U	100%

As the *D.c. Link Voltage* (05.005) rises above the lower threshold the braking IGBT is active with an on/off ratio of 1/100. As the voltage rises further, the on/off ratio increases until at the upper threshold the braking IGBT is on continuously. The upper and lower voltage threshold can be set up so that braking resistors in drives with parallel connected d.c. links will share the braking load.

If *Braking IGBT Lower Threshold* (06.073) ≥ *Braking IGBT Upper Threshold* (06.074) then the braking IGBT is off when *D.c. Link Voltage* (05.005) *Braking IGBT Upper Threshold* (06.074) and on if *D.c. Link Voltage* (05.005) ≥ *Braking IGBT Upper Threshold* (06.074). This method of control is the same as that used in Commander SK and the default values for the braking thresholds are equal to the braking thresholds in Commander SK.

Unless sharing between braking resistors is required the braking thresholds do not normally need to be adjusted. Care should be taken when reducing the thresholds because if either threshold is below the maximum value of the peak rectified supply voltage the braking resistor could take power from the supply.

The list below gives conditions that will disable the braking IGBT:

1. *Braking IGBT Upper Threshold* (06.074) = 0, or *Low Voltage Braking IGBT Threshold Select* (06.076) = 1 and *Low Voltage Braking IGBT Threshold* (06.075) = 0.
2. The drive is in the under-voltage state.
3. A priority 1, 2 or 3 trip is active.
4. There is a fault in the control system power supply.
5. The hardware or software over-temperature systems indicate that the braking resistor is too hot.
6. A braking IGBT over-current trip is active *OI Brake*.

Parameter	**06.074** ***Braking IGBT Upper Threshold***		
Short description	Defines the level of the d.c. bus voltage where the braking IGBT will be on continuously		
Mode	RFC-A		
Minimum	−VM_DC_VOLTAGE_SET	Maximum	VM_DC_VOLTAGE_SET
Default	See exceptions below	Units	V
Type	16 Bit User Save	Update Rate	Background
Display Format	Standard	Decimal Places	0
Coding	RW, VM, RA		

Voltage	*Default Value*
110V	390
200V	390
400V	780
575V	930
690V	1120

See *Braking IGBT Lower Threshold* (06.073).

Parameter	**06.075** ***Low Voltage Braking IGBT Threshold***		
Short description	Defines the threshold used for low voltage braking		
Mode	RFC-A		
Minimum	−VM_DC_VOLTAGE_SET	Maximum	VM_DC_VOLTAGE_SET
Default	0	Units	V
Type	16 Bit User Save	Update Rate	Background
Display Format	Standard	Decimal Places	0
Coding	RW, VM, RA		

If *Low Voltage Braking IGBT Threshold Select* (06.076) = 0 the normal thresholds are used. If *Low Voltage Braking IGBT Threshold Select* (06.076) = 1 then *Low Voltage Braking IGBT Threshold* (06.075) is used for both upper and lower thresholds. This allows a different braking threshold to be set for low voltage operation.

Parameter	**06.076** ***Low Voltage Braking IGBT Threshold Select***		
Short description	Set to 1 enable low voltage IGBT braking		
Mode	RFC-A		
Minimum	0	Maximum	1
Default	0	Units	
Type	1 Bit Volatile	Update Rate	Background
Display Format	Standard	Decimal Places	0
Coding	RW		

See *Low Voltage Braking IGBT Threshold* (06.075)

Parameter	**06.077** ***Low DC Link Operation***		
Short description	Set to 1 to allow a 400V drive to be ran from a 240V supply		
Mode	RFC-A		
Minimum	0	Maximum	1
Default	0	Units	
Type	1 Bit User Save	Update Rate	Background read
Display Format	Standard	Decimal Places	0
Coding	RW		

On the 400V product setting this bit will enable the drive to run from a 240VAC input. Low DC Link Operation is enabled when *Low DC Link Operation* (06.077) is set to one. See figure below.

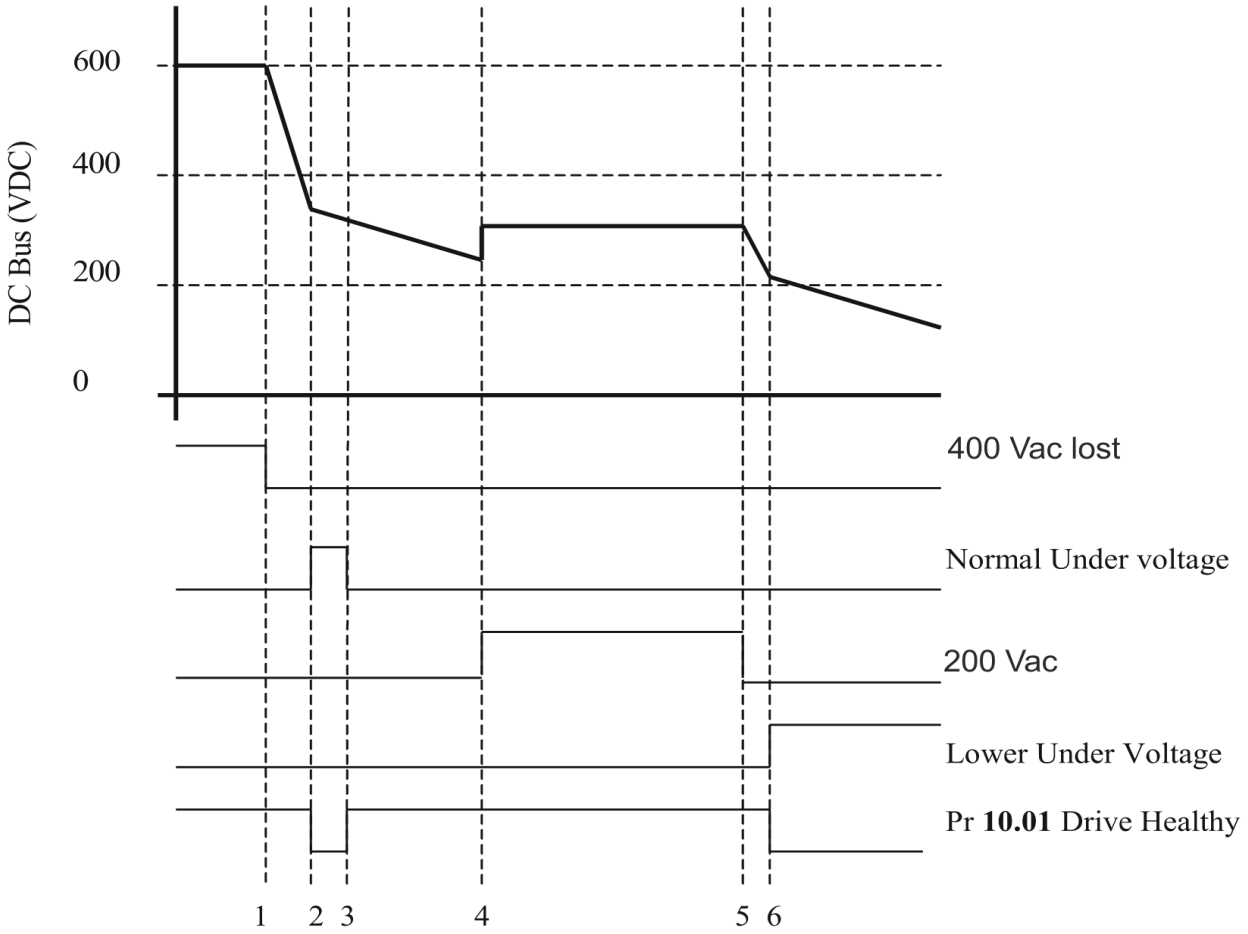

1. The mains AC supply is removed.
2. The drive trips UU. Power down parameters are saved
3. After the power down parameters are saved the UU trip is cleared. Drive will operate normally with the lower UU level set.
4. Back up AC supply is applied.
5. Back up AC supply is removed.
6. Drive trips UU. Power down parameters are not saved.

Note If the DC voltage is greater than 425VDC after 3 the UU level will return to normal.

Low AC Alarm (10.107) is displayed from step 2 on the figure above.

The functionality described for *Low DC Link Operation* (06.077) is supported across Frames 02-09. For Frames 05 and above, the minimum supply voltage supported is 330V DC (233VAC RMS)

Parameter	**06.084 *UTC Offset***		
Short description	UTC Offset		
Mode	RFC-A		
Minimum	-24.00	Maximum	24.00
Default	0.00	Units	Hours
Type	16 Bit User Save	Update Rate	Background Read
Display Format	Standard	Decimal Places	2
Coding	RW		

UTC Offset (06.084) is an offset, specified in hours, applied to the selected clock source (see *Date/Time Selector* (06.019)). This could be used for time zone offsets etc. The offset will be applied to the time obtained from the selected clock source, in addition to any offset already applied to the time from that source.

Menu 7 Single Line Descriptions − *Analog I/O*

Mode: RFC-A

Parameter		Range	Default	Type					
07.001	Analog Input 1	±100.00 %		RO	Num	ND	NC	PT	FI
07.002	Analog Input 2	±100.00 %		RO	Num	ND	NC	PT	FI
07.004	Stack Temperature	±250 °C		RO	Num	ND	NC	PT	
07.005	Auxiliary Temperature	±250 °C		RO	Num	ND	NC	PT	
07.007	Analog Input 1 Mode	4-20mA Stop (-6), 20-4mA Stop (-5), 4-20mA Low (-4), 20-4mA Low (-3), 4-20mA Hold (-2), 20-4mA Hold (-1), 0-20mA (0), 20-0mA (1), 4-20mA Trp (2), 20-4mA Trp (3), 4-20mA (4), 20-4mA (5), Voltage (6)	Voltage (6)	RW	Txt				US
07.008	Analog Input 1 Scaling	0.000 to 10.000	1.000	RW	Num				US
07.009	Analog Input 1 Invert	Off (0) or On (1)	Off (0)	RW	Bit				US
07.010	Analog Input 1 Destination A	0.000 to 30.999	1.036	RW	Num	DE		PT	US
07.011	Analog Input 2 Mode	4-20mA Stop (-6), 20-4mA Stop (-5), 4-20mA Low (-4), 20-4mA Low (-3), 4-20mA Hold (-2), 20-4mA Hold (-1), 0-20mA (0), 20-0mA (1), 4-20mA Trp (2), 20-4mA Trp (3), 4-20mA (4), 20-4mA (5), Voltage (6), Digital (7)	Voltage (6)	RW	Txt				US
07.012	Analog Input 2 Scaling	0.000 to 10.000	1.000	RW	Num				US
07.013	Analog Input 2 Invert	Off (0) or On (1)	Off (0)	RW	Bit				US
07.014	Analog Input 2 Destination A	0.000 to 30.999	1.037	RW	Num	DE		PT	US
07.019	Analog Output 1 Source A	0.000 to 30.999	2.001	RW	Num			PT	US
07.020	Analog Output 1 Scaling	0.000 to 40.000	1.000	RW	Num				US
07.021	Analog Output 1 Mode	Voltage (0), 0-20mA (1), 4-20mA (2), Digital (3)	Voltage (0)	RW	Txt				US
07.022	Analog Output 2 Source A	0.000 to 30.999	4.002	RW	Num			PT	US
07.023	Analog Output 2 Scaling	0.000 to 40.000	1.000	RW	Num				US
07.024	Analog Output 2 Mode	Voltage (0), 0-20mA (1), 4-20mA (2), Digital (3)	Voltage (0)	RW	Txt				US
07.026	Analog Input 1 Preset on Current Loss	4.00 to 20.00 mA	4.00 mA	RW	Num				US
07.027	Analog Input 2 Preset on Current Loss	4.00 to 20.00 mA	4.00 mA	RW	Num				US
07.028	Analog Input 1 Current Loop Loss	Off (0) or On (1)		RO	Bit	ND	NC	PT	
07.029	Analog Input 2 Current Loop Loss	Off (0) or On (1)		RO	Bit	ND	NC	PT	
07.030	Analog Input 1 Offset	±100.00 %	0.00 %	RW	Num				US
07.031	Analog Input 2 Offset	±100.00 %	0.00 %	RW	Num				US
07.034	Inverter Temperature	±250 °C		RO	Num	ND	NC	PT	
07.035	Percentage Of d.c. Link Thermal Trip Level	0 to 100 %		RO	Num	ND	NC	PT	
07.036	Percentage Of Drive Thermal Trip Level	0 to 100 %		RO	Num	ND	NC	PT	
07.037	Temperature Nearest To Trip Level	0 to 29999		RO	Num	ND	NC	PT	
07.046	Thermistor Type	DIN44081 (0), KTY84 (1), PT1000 (2), PT2000 (3), Other (4)	DIN44081 (0)	RW	Txt				US
07.047	Thermistor Feedback	0 to 4000 Ω		RO	Num	ND	NC	PT	FI
07.048	Thermistor Trip Threshold	0 to 4000 Ω	3300 Ω	RW	Num				US
07.049	Thermistor Reset Threshold	0 to 4000 Ω	1800 Ω	RW	Num				US
07.050	Thermistor Temperature	-50 to 300 °C		RO	Num	ND	NC	PT	FI
07.051	Analog Input 1 Control	0 to 5	0	RW	Num				US
07.052	Analog Input 2 Control	0 to 5	0	RW	Num				US
07.055	Analog Output 1 Control	0 to 15	0	RW	Num				US
07.056	Analog Output 2 Control	0 to 15	0	RW	Num				US
07.061	Analog Input 1 Minimum Reference	±100.00 %	-100.00 %	RW	Num				US
07.062	Analog Input 1 At Minimum Reference	±100.00 %	-100.00 %	RW	Num				US
07.063	Analog Input 1 Maximum Reference	±100.00 %	100.00 %	RW	Num				US
07.064	Analog Input 1 At Maximum Reference	±100.00 %	100.00 %	RW	Num				US
07.065	Analog Input 2 Minimum Reference	0.00 to 100.00 %	0.00 %	RW	Num				US
07.066	Analog Input 2 At Minimum Reference	±100.00 %	0.00 %	RW	Num				US
07.067	Analog Input 2 Maximum Reference	0.00 to 100.00 %	100.00 %	RW	Num				US
07.068	Analog Input 2 At Maximum Reference	±100.00 %	100.00 %	RW	Num				US
07.090	Analog Input 1 Destination B	0.000 to 30.999		RO	Num	DE	NC	PT	US

07.094	Analog Input 2 Destination B	0.000 to 30.999		RO	Num	DE	NC	PT	US
07.099	Analog Output 1 Source B	0.000 to 30.999		RO	Num	ND	NC	PT	US
07.102	Analog Output 2 Source B	0.000 to 30.999		RO	Num	ND	NC	PT	US

RW	Read / Write	RO	Read-only	Bit	Bit parameter	Txt	Text string	Date	Date parameter	Time	Time parameter
Chr	Character parameter	Bin	Binary parameter	IP	IP address	Mac	MAC address	Ver	Version number	SMP	Slot, menu, parameter
Num	Number parameter	DE	Destination	ND	No default value	RA	Rating dependent	NC	Non-copyable	PT	Protected
FI	Filtered	US	User save	PS	Power-down save						

Menu 7 − *Analog I/O*

Mode: RFC-A

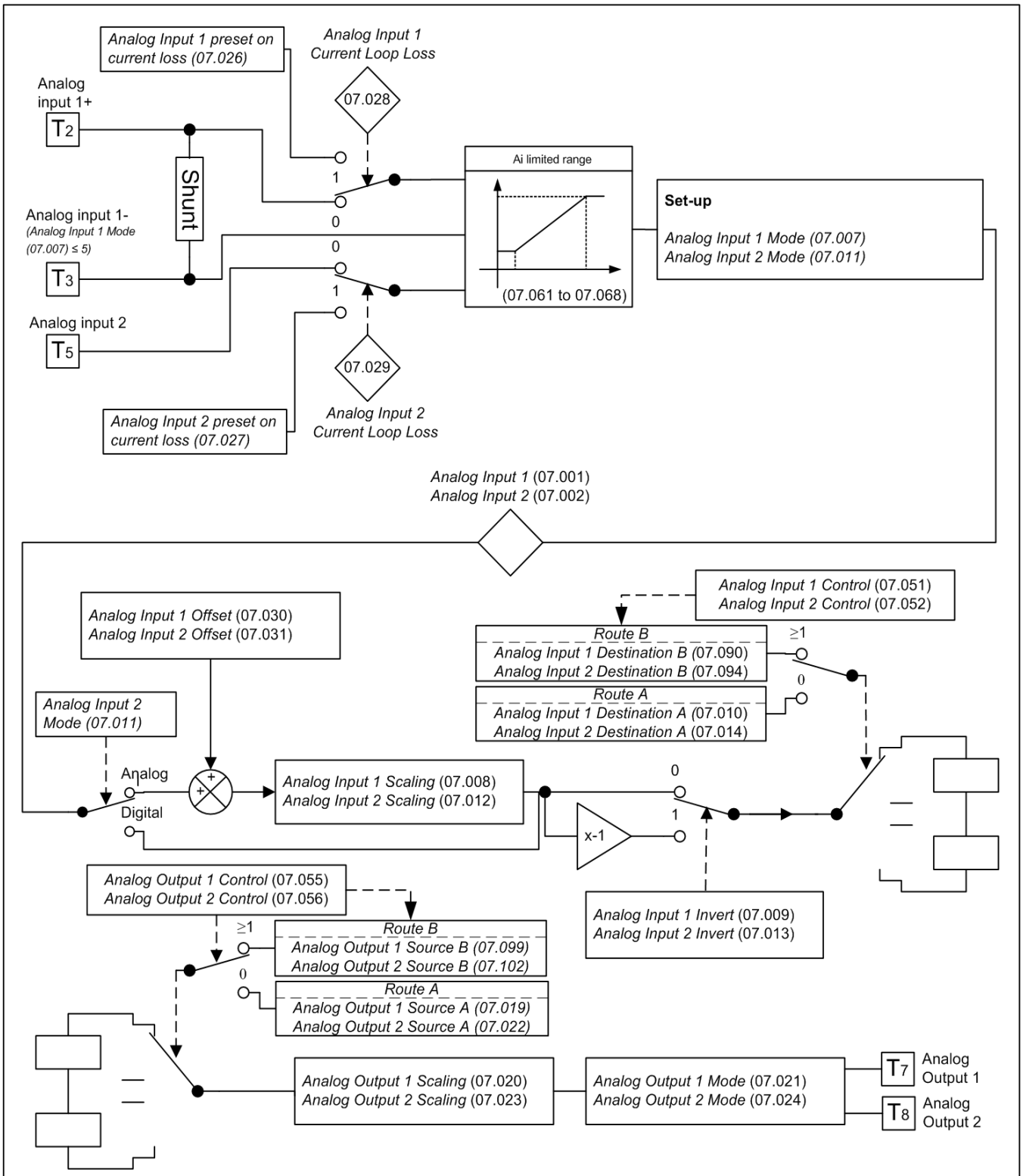

Fig.7.3: Analog I/O M400

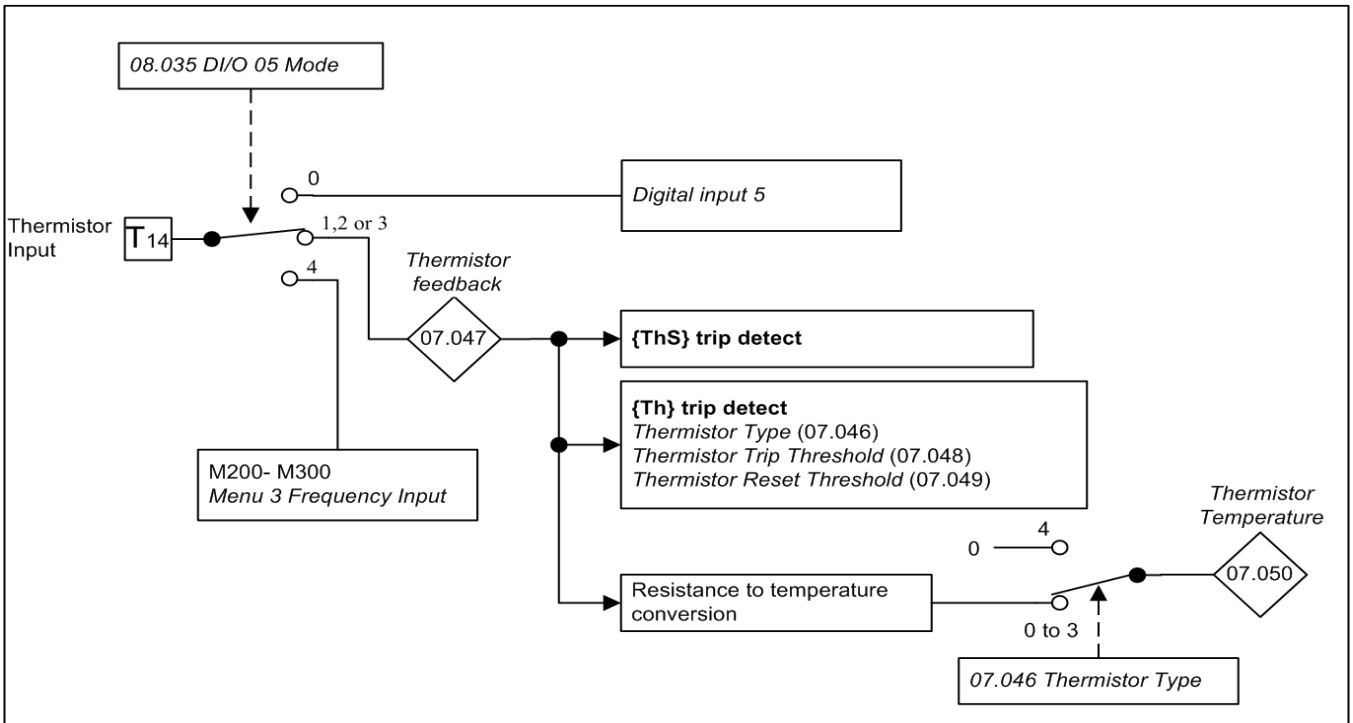

Fig.7.4: Thermistor input – M200-M400

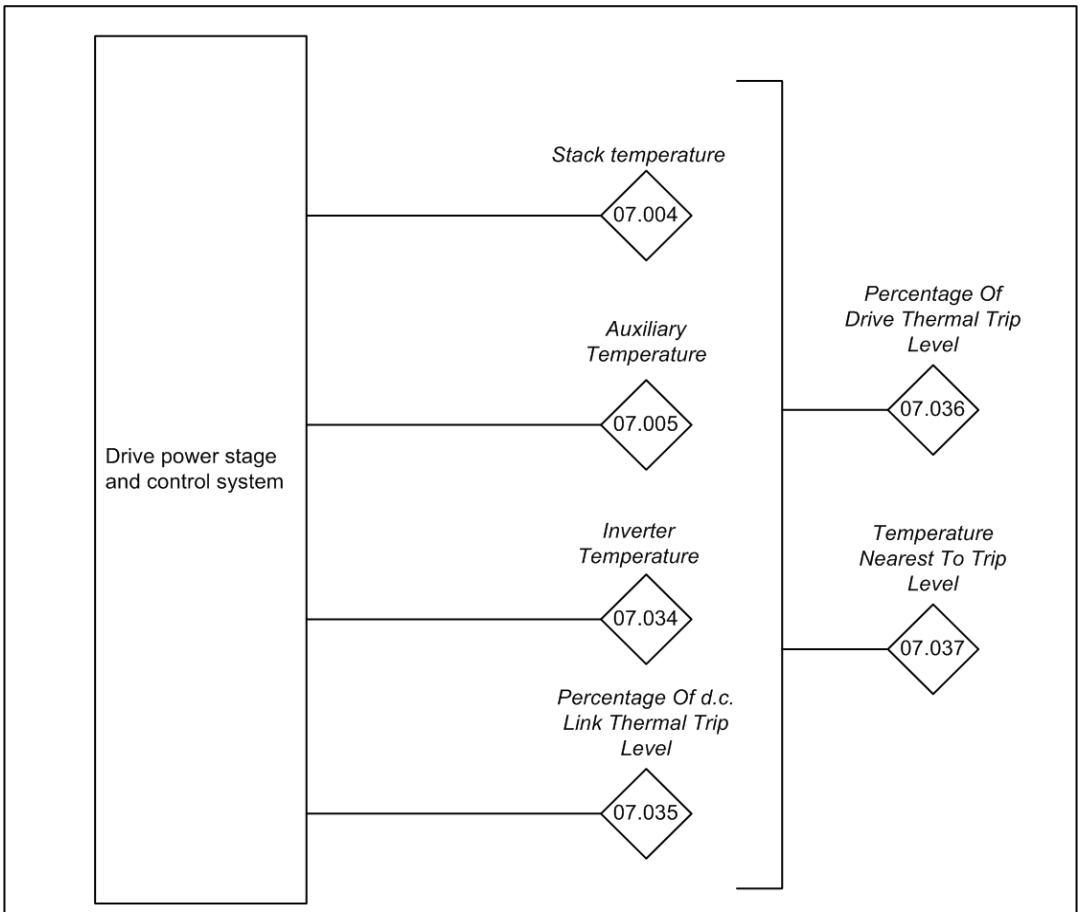

Fig.7.6: Drive temperature monitoring

Parameter	07.001 *Analog Input 1*		
Short description	Displays the value of analog input 1		
Mode	RFC-A		
Minimum	-100.00	Maximum	100.00
Default		Units	%
Type	16 Bit Volatile	Update Rate	4ms
Display Format	Standard	Decimal Places	2
Coding	RO, FI, ND, NC, PT		

The Analog input 1 can operate in different modes as defined by *Analog Input 1 Mode* (07.007) including current modes. See *Analog I/O*.

Voltage mode: Resolution of 12 bits (11 bits + sign). It is a single ended bipolar voltage input +/-10V

Current mode: Resolution of 11 bits. It is a differential unipolar current through input 0-20mA (burden in series)

The "Input Level" is defined for the different modes in the table below.

Mode	Input Level
Voltage	(Input Voltage/ 10V) x 100.00%
0-20mA	(Input Current / 20mA) x 100.00%
20-0mA	(20mA - Input Current) / 20mA x 100.00%
4-20mA	(Input Current - 4mA) / 16mA x 100.00%
20-4mA	(20mA - Input Current) / 16mA x 100.00%

Parameter	07.002 *Analog Input 2*		
Short description	Displays the value of analog input 2		
Mode	RFC-A		
Minimum	-100.00	Maximum	100.00
Default		Units	%
Type	16 Bit Volatile	Update Rate	4ms
Display Format	Standard	Decimal Places	2
Coding	RO, FI, ND, NC, PT		

See *Analog I/O*.

Voltage mode: This input is a unipolar voltage 0-10V.

Digital mode: This input can also be configured as a digital input in which case this parameter will indicate 0.00% or 100.00% depending on the state of the input.

Current mode: This input can be a single ended unipolar current input 0-20mA.

The "Input Level" is defined for the different modes in the table below.

Mode	Input Level
Voltage	(Input Voltage/ 10V) x 100.00%
0-20mA	(Input Current / 20mA) x 100.00%
20-0mA	(20mA - Input Current) / 20mA x 100.00%
4-20mA	(Input Current - 4mA) / 16mA x 100.00%
20-4mA	(20mA - Input Current) / 16mA x 100.00%
Digital	0.00% (corresponds to logical 0 if less than 9V) or 100.0% (corresponds to logical 1 if more than 11V)

Parameter	07.004 *Stack Temperature*		
Short description	Displays the temperature currently being measured on the heat sink		
Mode	RFC-A		
Minimum	-250	Maximum	250
Default		Units	°C
Type	16 Bit Volatile	Update Rate	Background write
Display Format	Standard	Decimal Places	0
Coding	RO, ND, NC, PT		

This parameter displays the temperature currently being measured on the heat sink. This is used as part of the drive thermal model, see *Drive Over-temperature Alarm* (10.018) for further details.

Parameter	07.005 *Auxiliary Temperature*		
Short description	Displays the temperature currently being measured on the power system		
Mode	RFC-A		
Minimum	-250	Maximum	250
Default		Units	°C
Type	16 Bit Volatile	Update Rate	Background write
Display Format	Standard	Decimal Places	0
Coding	RO, ND, NC, PT		

This parameter displays the temperature currently being measured on the power system on large frames. This is used as part of the drive thermal model.

Parameter	07.007 *Analog Input 1 Mode*		
Short description	Defines the mode of analog input 1		
Mode	RFC-A		
Minimum	-6	Maximum	6
Default	6	Units	
Type	8 Bit User Save	Update Rate	Background read
Display Format	Standard	Decimal Places	0
Coding	RW, TE		

Value	*Text*
-6	4-20mA Stop
-5	20-4mA Stop
-4	4-20mA Low
-3	20-4mA Low
-2	4-20mA Hold
-1	20-4mA Hold
0	0-20mA
1	20-0mA
2	4-20mA Trp
3	20-4mA Trp
4	4-20mA
5	20-4mA
6	Voltage

See *Analog Input 1* (07.001).

The table below gives all the possible analog input modes.

In 4-20mA and 20-4mA current input modes the software detects a current input less than 3mA as a current loop loss and initiates an action depending on the mode set in the table below.

Value	Mode	Function
-6	4-20mA Stop	4-20mA with stop on current loop loss
-5	20-4mA Stop	20-4mA with stop on current loop loss
-4	4-20mA Low	4-20mA with switching to a low speed set in *Analog Input 1 Preset on Current Loss* (07.026) on current loop loss
-3	20-4mA Low	20-4mA with switching to a low speed set in *Analog Input 1 Preset on Current Loss* (07.026) on current loop loss
-2	4-20mA Hold	4-20mA with hold at level before loss on current loop loss (1)
-1	20-4mA Hold	20-4mA with hold at level before loss on current loop loss (1)
0	0-20mA	0-20mA
1	20-0mA	20-0mA
2	4-20mA Trip	4-20mA with *An Input 1 Loss* trip on current loss.
3	20-4mA Trip	20-4mA with *An Input 1 Loss* trip on current loss.
4	4-20mA	4-20mA with no action on current loop loss (input taken as 0%).
5	20-4mA	20-4mA with no action on current loop loss (input taken as 0%).
6	Voltage	Voltage input

(1) Analog input level remains at the value it had in the previous sample before the current fell below 3mA.

Parameter	07.008 *Analog Input 1 Scaling*		
Short description	Defines the scaling factor of analog input 1		
Mode	RFC-A		
Minimum	0.000	Maximum	10.000
Default	1.000	Units	
Type	16 Bit User Save	Update Rate	Background read
Display Format	Standard	Decimal Places	3
Coding	RW		

See *Analog I/O*.

Analog Input 1 (07.001) is modified by *Analog Input 1 Scaling* (07.008), *Analog Input 1 Offset* (07.030) and *Analog Input 1 Invert* (07.009) before it is routed to its destination as follows:

A_{1O} = *Analog Input 1* (07.001) + *Analog Input 1 Offset* (07.030)
A_{1O} is the value after the offset has been applied and is limited between -100.00% and 100.00%

A_{1S} = A_{1O} x *Analog Input 1 Scaling* (07.008)
A_{1S} is the value after the scaling and the offset have been applied and is limited between -100.00% and 100.00%

If *Analog Input 1 Invert* (07.009) = 0 then $A_{1I} = A_{1S}$ otherwise $A_{1I} = -A_{1S}$

A1I is the value after the invert, scaling and offset have been applied and is the final value that is routed to the destination defined by

- *Analog Input 1 Destination A* (07.010) if *Analog Input 1 Control* (07.051) = 0
- *Analog Input 1 Destination B* (07.090) if *Analog Input 1 Control* (07.051) > 0

Parameter	07.009 *Analog Input 1 Invert*		
Short description	Inverts the signal for analog input 1		
Mode	RFC-A		
Minimum	0	Maximum	1
Default	0	Units	
Type	1 Bit User Save	Update Rate	Background read
Display Format	Standard	Decimal Places	0
Coding	RW		

See *Analog Input 1 Scaling* (07.008).

Parameter	07.010 *Analog Input 1 Destination A*		
Short description	Defines the output parameter for analog input 1		
Mode	RFC-A		
Minimum	0.000	Maximum	30.999
Default	1.036	Units	
Type	16 Bit User Save	Update Rate	Drive reset read
Display Format	Standard	Decimal Places	3
Coding	RW, DE, PT		

See *Analog Input 1 Scaling* (07.008).

Parameter	07.011 *Analog Input 2 Mode*		
Short description	Defines the mode for analog input 2		
Mode	RFC-A		
Minimum	-6	Maximum	7
Default	6	Units	
Type	8 Bit User Save	Update Rate	Background read
Display Format	Standard	Decimal Places	0
Coding	RW, TE		

Value	*Text*
-6	4-20mA Stop
-5	20-4mA Stop
-4	4-20mA Low
-3	20-4mA Low
-2	4-20mA Hold
-1	20-4mA Hold
0	0-20mA
1	20-0mA
2	4-20mA Trp
3	20-4mA Trp
4	4-20mA
5	20-4mA
6	Voltage
7	Digital

See *Analog Input 2* (07.002).

The table below gives all the possible analog input modes.

In 4-20mA and 20-4mA current input modes the software detects a current input less than 3mA as a current loop loss and initiates an action depending on the mode set in the table below.

Value	Mode	Function
-6	4-20mA Stop	4-20mA with stop on current loop loss
-5	20-4mA Stop	20-4mA with stop on current loop loss
-4	4-20mA Low	4-20mA with switching to a low speed set in *Analog Input 2 Preset on Current Loss* (07.027) on current loop loss
-3	20-4mA Low	20-4mA with switching to a low speed set in *Analog Input 2 Preset on Current Loss* (07.027) on current loop loss
-2	4-20mA Hold	4-20mA with hold at level before loss on current loop loss (1)
-1	20-4mA Hold	20-4mA with hold at level before loss on current loop loss (1)
0	0-20mA	0-20mA
1	20-0mA	20-0mA
2	4-20mA Trip	4-20mA with *An Input 2 Loss* trip on current loss.
3	20-4mA Trip	20-4mA with *An Input 2 Loss* trip on current loss.
4	4-20mA	4-20mA with no action on current loop loss (input taken as 0%).
5	20-4mA	20-4mA with no action on current loop loss (input taken as 0%).
6	Voltage	Voltage input
7	Digital	Digital input

(1) Analog input level remains at the value it had in the previous sample before the current fell below 3mA.

Parameter	07.012 *Analog Input 2 Scaling*		
Short description	Defines the scaling factor for analog input 2		
Mode	RFC-A		
Minimum	0.000	Maximum	10.000
Default	1.000	Units	
Type	16 Bit User Save	Update Rate	Background read
Display Format	Standard	Decimal Places	3
Coding	RW		

See *Analog I/O*.

Analog Input 2 (07.002) is modified by *Analog Input 2 Scaling* (07.012), *Analog Input 2 Offset* (07.031) and *Analog Input 2 Invert* (07.013) before it is routed to its destination as follows:

A_{2O} = *Analog Input 2* (07.002)+ *Analog Input 2 Offset* (07.031)
A_{2O} is the value after the offset has been applied and is limited between 0.00% and 100.00%

A_{2S} = A_{2O} x *Analog Input 2 Scaling* (07.012)
A_{2S} is the value after the scaling and the offset have been applied and is limited between 0.00% and 100.00%

If *Analog Input 2 Invert* (07.013) = 0 then A_{2I} = A_{2S} otherwise A_{2I} = -A_{2S}

A_{2I} is the value after the invert, scaling and offset have been applied and is the final value that is routed to the destination defined by

- *Analog Input 2 Destination A* (07.014) if *Analog Input 2 Control* (07.052) = 0
- *Analog Input 2 Destination B* (07.094) if *Analog Input 2 Control* (07.052) > 0

Parameter	07.013 *Analog Input 2 Invert*		
Short description	Inverts the signal for analog input 2		
Mode	RFC-A		
Minimum	0	Maximum	1
Default	0	Units	
Type	1 Bit User Save	Update Rate	Background read
Display Format	Standard	Decimal Places	0
Coding	RW		

See *Analog Input 2 Scaling* (07.012).

Parameter	07.014 *Analog Input 2 Destination A*		
Short description	Defines the output parameter for analog input 2		
Mode	RFC-A		
Minimum	0.000	Maximum	30.999
Default	1.037	Units	
Type	16 Bit User Save	Update Rate	Drive reset read
Display Format	Standard	Decimal Places	3
Coding	RW, DE, PT		

See *Analog Input 2 Scaling* (07.012).

Parameter	07.019 *Analog Output 1 Source A*		
Short description	Defines the input parameter for analog output 1		
Mode	RFC-A		
Minimum	0.000	Maximum	30.999
Default	2.001	Units	
Type	16 Bit User Save	Update Rate	Drive reset read
Display Format	Standard	Decimal Places	3
Coding	RW, PT		

Analog Output 1 Source A (07.019) defines the source parameter for Analog Output 1. The modulus of the value of the source parameter is then scaled with *Analog Output 1 Scaling* (07.020) and if the scaling is greater than 1.000 the value is clamped to 100.0%.

The output gets converted to an anolog signal according to the setting of *Analog Output 1 Mode* (07.021) :

- In voltage mode: 0V to +10V
- In current mode: 4-20mA or 0-20mA depending on the mode selected
- In digital mode: 0V or +24V. Scaling parameter has no effect.
    - If source is a bit parameter then "Off" gives 0V and "On" gives +24V
    - If source is not a bit parameter then the source parameter must be more than half its positive range to be in the "On" state.

Parameter	07.020 *Analog Output 1 Scaling*		
Short description	Defines the scaling factor for analog output 1		
Mode	RFC-A		
Minimum	0.000	Maximum	40.000
Default	1.000	Units	
Type	16 Bit User Save	Update Rate	Background read
Display Format	Standard	Decimal Places	3
Coding	RW, BU		

See *Analog Output 1 Source A* (07.019).

An automatic scaling takes place when parameters are selected for an analog output. The maximum value of the parameter is used as the full scale value such that the analog output will be at full scale when the parameter value is at its maximum value. Some parameters do not reach their maximum values and so this parameter is provided for the user to apply further scaling and configure a bigger range of the analog output to be used.

Parameter	07.021 *Analog Output 1 Mode*		
Short description	Defines the mode of analog output 1		
Mode	RFC-A		
Minimum	0	Maximum	3
Default	0	Units	
Type	8 Bit User Save	Update Rate	Background read
Display Format	Standard	Decimal Places	0
Coding	RW, TE		

Value	*Text*
0	Voltage
1	0-20mA
2	4-20mA
3	Digital

The table above gives all possible analog output 1 modes.

Parameter	07.022 *Analog Output 2 Source A*		
Short description	Defines the input source for analog output 2		
Mode	RFC-A		
Minimum	0.000	Maximum	30.999
Default	4.002	Units	
Type	16 Bit User Save	Update Rate	Drive reset read
Display Format	Standard	Decimal Places	3
Coding	RW, PT		

Analog output 2 operates in the same way as analog output 1. See *Analog Output 1 Source A* (07.019).

Parameter	07.023 *Analog Output 2 Scaling*		
Short description	Defines the scaling factor for analog output 2		
Mode	RFC-A		
Minimum	0.000	Maximum	40.000
Default	1.000	Units	
Type	16 Bit User Save	Update Rate	Background read
Display Format	Standard	Decimal Places	3
Coding	RW, BU		

Analog output 2 operates in the same way as analog output 1. See *Analog Output 1 Source A* (07.019).

An automatic scaling takes place when parameters are selected for an analog output. The maximum value of the parameter is used as the full scale value such that the analog output will be at full scale when the parameter value is at its maximum value. Some parameters do not reach their maximum values and so this parameter is provided for the user to apply further scaling and configure a bigger range of the analog output to be used.

Parameter	07.024 *Analog Output 2 Mode*		
Short description	Defines the mode of analog output 2		
Mode	RFC-A		
Minimum	0	Maximum	3
Default	0	Units	
Type	8 Bit User Save	Update Rate	Background read
Display Format	Standard	Decimal Places	0
Coding	RW, TE		

Value	*Text*
0	Voltage
1	0-20mA
2	4-20mA
3	Digital

The table above gives all possible analog output 2 modes.

Parameter	07.026 *Analog Input 1 Preset on Current Loss*		
Short description	Defines the current level held on analog input 1 current loss		
Mode	RFC-A		
Minimum	4.00	Maximum	20.00
Default	4.00	Units	mA
Type	16 Bit User Save	Update Rate	4ms read
Display Format	Standard	Decimal Places	2
Coding	RW		

If *Analog Input 1 Mode* (07.007) is set to the *4-20mA Low* or *20-4mA Low* modes and the current falls below 3mA (*Analog Input 1 Current Loop Loss* (07.028) = 1) then the analog input 1 is held to *Analog Input 1 Preset on Current Loss* (07.026).

If the current rise above 4mA (*Analog Input 1 Current Loop Loss* (07.028) = 0) then the analog input 1 current is used as normal.

Parameter	07.027 *Analog Input 2 Preset on Current Loss*		
Short description	Defines the current level held on analog input 2 current loss		
Mode	RFC-A		
Minimum	4.00	Maximum	20.00
Default	4.00	Units	mA
Type	16 Bit User Save	Update Rate	4ms read
Display Format	Standard	Decimal Places	2
Coding	RW		

If *Analog Input 2 Mode* (07.011) is set to the *4-20mA Low* or *20-4mA Low* modes and the current falls below 3mA (*Analog Input 2 Current Loop Loss* (07.029) = 1) then the analog input 2 is held to *Analog Input 2 Preset on Current Loss* (07.027).

If the current rise above 4mA (*Analog Input 2 Current Loop Loss* (07.029) = 0) then the analog input 2 current is used as normal.

Parameter	07.028 *Analog Input 1 Current Loop Loss*		
Short description	Displays when analog input 1 falls below 3mA		
Mode	RFC-A		
Minimum	0	Maximum	1
Default		Units	
Type	1 Bit Volatile	Update Rate	Background write
Display Format	Standard	Decimal Places	0
Coding	RO, ND, NC, PT		

See *Analog Input 1 Preset on Current Loss* (07.026).

Parameter	07.029 *Analog Input 2 Current Loop Loss*		
Short description	Displays when analog input 2 falls below 3mA		
Mode	RFC-A		
Minimum	0	Maximum	1
Default		Units	
Type	1 Bit Volatile	Update Rate	Background write
Display Format	Standard	Decimal Places	0
Coding	RO, ND, NC, PT		

See *Analog Input 2 Preset on Current Loss* (07.027).

Parameter	07.030 *Analog Input 1 Offset*		
Short description	Defines the offset of analog input 1		
Mode	RFC-A		
Minimum	-100.00	Maximum	100.00
Default	0.00	Units	%
Type	16 Bit User Save	Update Rate	Background read
Display Format	Standard	Decimal Places	2
Coding	RW		

See *Analog Input 1 Scaling* (07.008).

Parameter	07.031 *Analog Input 2 Offset*		
Short description	Defines the offset of analog input 2		
Mode	RFC-A		
Minimum	-100.00	Maximum	100.00
Default	0.00	Units	%
Type	16 Bit User Save	Update Rate	Background read
Display Format	Standard	Decimal Places	2
Coding	RW		

See *Analog Input 2 Scaling* (07.012).

Parameter	07.034 *Inverter Temperature*		
Short description	Displays the estimated junction temperature of the hottest power device within the drive inverter		
Mode	RFC-A		
Minimum	-250	Maximum	250
Default		Units	°C
Type	16 Bit Volatile	Update Rate	Background write
Display Format	Standard	Decimal Places	0
Coding	RO, ND, NC, PT		

Inverter Temperature (07.034) shows the estimated junction temperature of the hottest power device within the drive inverter. If this temperature exceeds the switch down threshold defined for the power stage the switching frequency is reduced provided this feature has not been disabled (i.e. *Auto-switching Frequency Change Disable* (05.035) = 0) or the minimum switching frequency has not been reached. The switching frequency can be reduced from 12kHz to 6kHz to 3kHz, or from 16kHz to 8kHz to 4kHz to 2kHz. If the switching frequency has been reduced the drive will attempt to restore it to the required level when the *Inverter Temperature* (07.034) reduces.

Parameter	07.035 *Percentage Of d.c. Link Thermal Trip Level*		
Short description	Displays the percentage of the maximum allowed temperature as estimated by the thermal model of the d.c. link components		
Mode	RFC-A		
Minimum	0	Maximum	100
Default		Units	%
Type	8 Bit Volatile	Update Rate	Background write
Display Format	Standard	Decimal Places	0
Coding	RO, ND, NC, PT		

Percentage Of d.c. Link Thermal Trip Level (07.035) gives the percentage of the maximum allowed temperature as estimated by the thermal model of the d.c. link components.

Parameter	**07.036** ***Percentage Of Drive Thermal Trip Level***		
Short description	Displays the percentage of the thermal trip level of the temperature monitoring point or thermal model in the drive that is highest		
Mode	RFC-A		
Minimum	0	Maximum	100
Default		Units	%
Type	8 Bit Volatile	Update Rate	Background write
Display Format	Standard	Decimal Places	0
Coding	RO, ND, NC, PT		

Percentage Of Drive Thermal Trip Level (07.036) gives the percentage of the thermal trip level of the temperature monitoring point or thermal model in the drive that is highest. This includes all thermal monitoring points *Stack Temperature* (07.004), *Auxiliary Temperature* (07.005), *Inverter Temperature* (07.034) and *Percentage Of d.c. Link Thermal Trip Level* (07.035).

Percentage Of d.c. Link Thermal Trip Level (07.035) is used directly to give *Percentage Of Drive Thermal Trip Level* (07.036), but for all other monitored values which are temperatures this is given by

Percentage of thermal trip level = (Measured Temperature - 40°C) / (Trip temperature - 40°C) x 100%

The location of the measurement or the thermal model that is related to this temperature is given in *Temperature Nearest To Trip Level* (07.037). If *Percentage Of Drive Thermal Trip Level* (07.036) exceeds 90% *Drive Over-temperature Alarm* (10.018) is set to one. If *Percentage Of Drive Thermal Trip Level* (07.036) reaches 100% one of the trips given in the table below is initiated. The trip can be reset when the percentage of thermal trip level falls below 95%.

Temperature	**Trip**
Inverter Temperature (07.034)	*OHt Inverter*
Stack Temperature (07.004) and*Auxiliary Temperature* (07.005)	*OHt Power*
Percentage Of d.c. Link Thermal Trip Level (07.035)	*OHt dc bus*

Parameter	**07.037** ***Temperature Nearest To Trip Level***		
Short description	Displays the location or the model that corresponds to the value shown in Percentage Of Drive Thermal Trip Level		
Mode	RFC-A		
Minimum	0	Maximum	29999
Default		Units	
Type	32 Bit Volatile	Update Rate	Background write
Display Format	Standard	Decimal Places	0
Coding	RO, ND, NC, PT		

Temperature Nearest To Trip Level (07.037) shows the location or the model that corresponds to the value shown in *Percentage Of Drive Thermal Trip Level* (07.036) in the form xxyzz as shown in the table below.

Source	**xx**	**y**	**zz**
Control system	00	1	00: Inverter thermal model (*Inverter Temperature* (07.034))
Control system	00	2	00: D.c. link thermal model (*Percentage Of d.c. Link Thermal Trip Level* (07.035))
Power system	01	0	zz: Thermistor location defined by zz in the power system (*Stack Temperature* (07.004) or *Auxiliary Temperature* (07.005))
Power system (Large frame only)	01	1	zz: Thermistor location defined by zz in the rectifier

Parameter	**07.046** ***Thermistor Type***		
Short description	Defines the thermistor type when used		
Mode	RFC-A		
Minimum	0	Maximum	4
Default	0	Units	
Type	8 Bit User Save	Update Rate	Background write
Display Format	Standard	Decimal Places	0
Coding	RW, TE		

Value	***Text***
0	DIN44081
1	KTY84
2	PT1000
3	PT2000
4	Other

Thermistor Type (07.046) defines the operation of the temperature feedback interface for DI/O 05 when *Digital input 5 mode* (08.035) is 1, 2 or 3.

If *Thermistor Type* (07.046) = 0, the thermistor DIN44081 is designed to react like a temperature switch and therefore *Thermistor Temperature* (07.050) always reads 0.0°C.

If *Thermistor Type* (07.046) = 1 to 3 is selected, the digital input operation of the terminal is disabled.

If *Thermistor Type* (07.046) = 4, any thermistor can be used but *Thermistor Temperature* (07.050) always reads 0.0°C.

Parameter	**07.047** ***Thermistor Feedback***		
Short description	Displays the measured resistance of the thermistor when used		
Mode	RFC-A		
Minimum	0	Maximum	4000
Default		Units	Ω
Type	16 Bit Volatile	Update Rate	Background write
Display Format	Standard	Decimal Places	0
Coding	RO, FI, ND, NC, PT		

Thermistor Feedback (07.047) shows the measured resistance. If *Digital input 5 mode* (08.035) is 2 then {Th} trip is initiated if the feedback value is higher than

Thermistor Trip Threshold (07.048). The trip cannot be reset unless the feedback is below *Thermistor Reset Threshold* (07.049). The default values for *Thermistor Trip Threshold* (07.048) and *Thermistor Reset Threshold* (07.049) are the levels specified in the DIN 44082 standard.

Parameter	**07.048 *Thermistor Trip Threshold***		
Short description	Defines the thermistor trip threshold when used		
Mode	RFC-A		
Minimum	0	Maximum	4000
Default	3300	Units	Ω
Type	16 Bit User Save	Update Rate	Background read
Display Format	Standard	Decimal Places	0
Coding	RW		

See *Thermistor Feedback* (07.047).

Parameter	**07.049 *Thermistor Reset Threshold***		
Short description	Defines the thermistor reset threshold when used		
Mode	RFC-A		
Minimum	0	Maximum	4000
Default	1800	Units	Ω
Type	16 Bit User Save	Update Rate	Background read
Display Format	Standard	Decimal Places	0
Coding	RW		

See *Thermistor Feedback* (07.047).

Parameter	**07.050 *Thermistor Temperature***		
Short description	Displays the temperature of the device based on the resistance to temperature characteristic for the specified device		
Mode	RFC-A		
Minimum	-50	Maximum	300
Default		Units	°C
Type	16 Bit Volatile	Update Rate	Background write
Display Format	Standard	Decimal Places	0
Coding	RO, FI, ND, NC, PT		

If a KTY84, PT1000 or PT2000 type device is selected for temperature feedback (i.e. *Thermistor Type* (07.046) = 1 to 3) then *Thermistor Temperature* (07.050) shows the temperature of the device based on the resistance to temperature characteristic specified for this device. Otherwise *Thermistor Temperature* (07.050) = 0.0.

Parameter	**07.051 *Analog Input 1 Control***		
Short description	Defines the functionality of analog input 1		
Mode	RFC-A		
Minimum	0	Maximum	5
Default	0	Units	
Type	8 Bit User Save	Update Rate	Drive reset read
Display Format	Standard	Decimal Places	0
Coding	RW		

Value	**Description**	***Analog Input 1 Destination B* (07.090)**
0	User defined by *Analog Input 1 Destination A* (07.010)	00.000
1	Frequency reference 1	01.036
2	Frequency reference 2	01.037
3	Maximum reference clamp	01.006
4	Current limit	04.007
5	Torque reference	04.008

This offers a simple control of parameter *Analog Input 1 Destination B* (07.090) to change the analog input 1 functionality.

If *Analog Input 1 Control* (07.051) is more than 0 then the destination is defined by *Analog Input 1 Destination B* (07.090). The destination *Analog Input 1 Destination B* (07.090) is written by *Analog Input 1 Control* (07.051) selection. (i.e. If *Analog Input 1 Control* (07.051) = 3 then *Analog Input 1 Destination B* (07.090) = 01.006)

If *Analog Input 1 Control* (07.051) is 0 then then the destination is defined by *Analog Input 1 Destination A* (07.010).

Parameter	**07.052 *Analog Input 2 Control***		
Short description	Defines the functionality of analog input 2		
Mode	RFC-A		
Minimum	0	Maximum	5
Default	0	Units	
Type	8 Bit User Save	Update Rate	Drive reset read
Display Format	Standard	Decimal Places	0
Coding	RW		

Value	**Description**	***Analog Input 2 Destination B* (07.094)**
0	User defined by *Analog Input 2 Destination A* (07.014)	00.000
1	Frequency reference 1	01.036
2	Frequency reference 2	01.037
3	Maximum reference clamp	01.006
4	Current limit	04.007
5	Torque reference	04.008

This offers a simple control of parameter *Analog Input 2 Destination B* (07.094) to change the analog input 2 functionality.

If *Analog Input 2 Control* (07.052) is more than 0 then the destination is defined by *Analog Input 2 Destination B* (07.094). The destination *Analog Input 2 Destination B* (07.094) is written by *Analog Input 2 Control* (07.052) selection. (i.e. If *Analog Input 2 Control* (07.052)= 3 then *Analog Input 2 Destination B* (07.094) = 01.006)

If *Analog Input 2 Control* (07.052) is 0 then then the destination is defined by *Analog Input 2 Destination A* (07.014).

Parameter	**07.055 *Analog Output 1 Control***		
Short description	Defines the functionality of analog output 1		
Mode	RFC-A		
Minimum	0	Maximum	15
Default	0	Units	
Type	8 Bit User Save	Update Rate	Drive reset read
Display Format	Standard	Decimal Places	0
Coding	RW, BU		

Value	**Description**	***Analog Output 1 Source B* (07.099)**
0	User defined by *Analog Output 1 Source A* (07.019)	00.000
1	Post Ramp frequency reference (0 - ±VM_SPEED_FREQ_REF)	02.001
2	Pre Ramp frequency reference (0 - ±VM_SPEED_FREQ_REF)	01.003
3	Motor speed (0 - ±33,000)	05.004
4	Current output (0 - *Full Scale Current Kc* (11.061))	04.001
5	Reserved	Reserved
6	Percentage load (0 - ± *User Current Maximum Scaling* (04.024))	04.020
7	Torque producing current (0 - *Full Scale Current Kc* (11.061))	04.002
8	Voltage output (0 - VM_AC_VOLTAGE)	05.002
9	DC bus voltage (0 - VM_DC_VOLTAGE)	05.005
10	Analogue Input 1 (0 - ±100%)	07.001
11	Analogue Input 2 (0 - ±100%)	07.002
12	Power output (0 - ±VM_POWER)	05.003
13	Current limit (0 - ±VM_TORQUE_CURRENT)	04.018
14	Torque reference (0 - ±*User Current Maximum Scaling* (04.024))	04.008
15	Reserved	Reserved

This offers a simple control of parameter *Analog Output 1 Source B* (07.099) to change the analog output 1 source.

If *Analog Output 1 Control* (07.055) is more than 0 then the source is defined by *Analog Output 1 Source B* (07.099). The source *Analog Output 1 Source B* (07.099) is written by *Analog Output 1 Control* (07.055) selection. (i.e. If *Analog Output 1 Control* (07.055) = 13 then *Analog Output 1 Source B* (07.099) = 04.018)

If 07.055 is 0 then then the source is defined by *Analog Output 1 Source A* (07.019) .

Parameter	**07.056 *Analog Output 2 Control***		
Short description	Defines the functionality of analog output 2		
Mode	RFC-A		
Minimum	0	Maximum	15
Default	0	Units	
Type	8 Bit User Save	Update Rate	Drive reset read
Display Format	Standard	Decimal Places	0
Coding	RW, BU		

Value	**Description**	***Analog Output 2 Source B* (07.102)**
0	User defined by *Analog Output 2 Source A* (07.022)	00.000
1	Post Ramp frequency reference (0 - ±VM_SPEED_FREQ_REF)	02.001
2	Pre Ramp frequency reference (0 - ±VM_SPEED_FREQ_REF)	01.003
3	Motor speed (0 - ±33,000)	05.004
4	Current output (0 - *Full Scale Current Kc* (11.061))	04.001
5	Reserved	Reserved
6	Percentage load (0 - ± *User Current Maximum Scaling* (04.024))	04.020
7	Torque producing current (0 - *Full Scale Current Kc* (11.061))	04.002
8	Voltage output (0 - VM_AC_VOLTAGE)	05.002
9	DC bus voltage (0 - VM_DC_VOLTAGE)	05.005
10	Analogue Input 1 (0 - ±100%)	07.001
11	Analogue Input 2 (0 - ±100%)	07.002
12	Power output (0 - ±VM_POWER)	05.003
13	Current limit (0 - ±VM_TORQUE_CURRENT)	04.018
14	Torque reference (0 - ±*User Current Maximum Scaling* (04.024))	04.008
15	Reserved	Reserved

This offers a simple control of parameter *Analog Output 2 Source B* (07.102) to change the analog output 2 source.

If *Analog Output 2 Control* (07.056) is more than 0 then the source is defined by *Analog Output 2 Source B* (07.102). The source *Analog Output 2 Source B* (07.102) is written by *Analog Output 2 Control* (07.056) selection. (i.e. If *Analog Output 2 Control* (07.056) = 13 then *Analog Output 2 Source B* (07.102) = 04.018)

If *Analog Output 2 Control* (07.056) is 0 then then the source is defined by *Analog Output 2 Source A* (07.022).

Parameter	**07.061** ***Analog Input 1 Minimum Reference***		
Short description	Defines the minimum reference for analog input 1		
Mode	RFC-A		
Minimum	-100.00	Maximum	100.00
Default	-100.00	Units	%
Type	16 Bit User Save	Update Rate	Background read
Display Format	Standard	Decimal Places	2
Coding	RW		

Analog Input 1 (07.001) can be scaled and limited using the following parameters:

- *Analog Input 1 Minimum Reference* (07.061)
- *Analog Input 1 At Minimum Reference* (07.062)
- *Analog Input 1 Maximum Reference* (07.063)
- *Analog Input 1 At Maximum Reference* (07.064)

Parameters above can be selected to limit the range of *Analog Input 1* (07.001) and also scale it between the minimum and maximum reference.

If *Analog Input 1 Minimum Reference* (07.061) ≥ *Analog Input 1 Maximum Reference* (07.063) then A_{i1} = 0.00%whatever the input level.

Input Level is limited between *Analog Input 1 At Minimum Reference* (07.062) and *Analog Input 1 At Maximum Reference* (07.064)

Analog Input 1 (07.001) = [(*Analog Input 1 At Maximum Reference* (07.064) - *Analog Input 1 At Minimum Reference* (07.062)) / (*Analog Input 1 Maximum Reference* (07.063) - *Analog Input 1 Minimum Reference* (07.061))] x (Input level - *Analog Input 1 Minimum Reference* (07.061)) + *Analog Input 1 At Minimum Reference* (07.062).

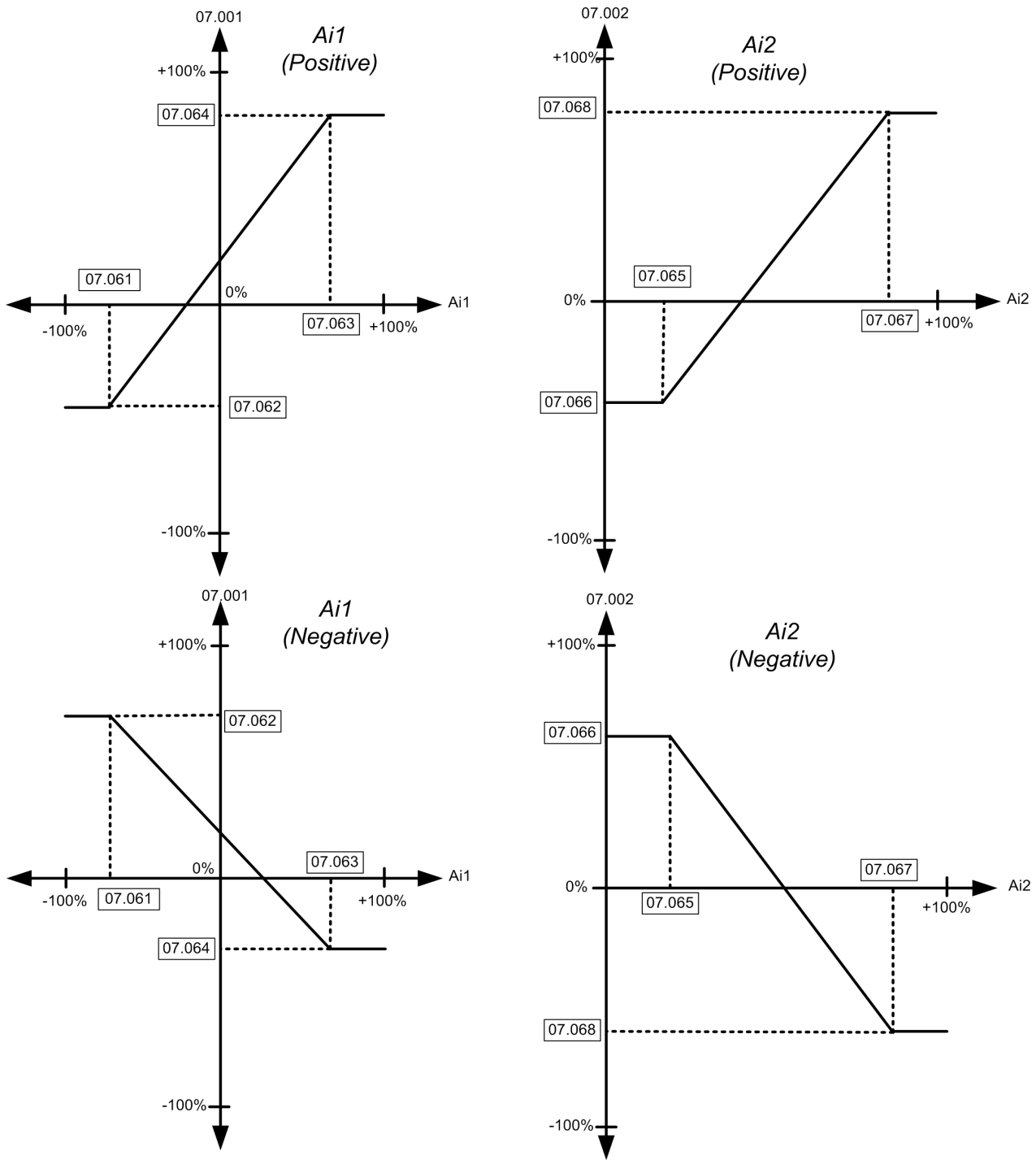

Fig.7.5c: Analog Input scaling & limit

Parameter	07.062 *Analog Input 1 At Minimum Reference*		
Short description	Defines the value of analog input 1 at minimum reference		
Mode	RFC-A		
Minimum	-100.00	Maximum	100.00
Default	-100.00	Units	%
Type	16 Bit User Save	Update Rate	Background read
Display Format	Standard	Decimal Places	2
Coding	RW		

See *Analog Input 1 Minimum Reference* (07.061).

Parameter	07.063 *Analog Input 1 Maximum Reference*		
Short description	Defines the maximum reference for analog input 1		
Mode	RFC-A		
Minimum	-100.00	Maximum	100.00
Default	100.00	Units	%
Type	16 Bit User Save	Update Rate	Background read
Display Format	Standard	Decimal Places	2
Coding	RW		

See *Analog Input 1 Minimum Reference* (07.061).

Parameter	07.064 *Analog Input 1 At Maximum Reference*		
Short description	Defines the value of analog input 1 at maximum reference		
Mode	RFC-A		
Minimum	-100.00	Maximum	100.00
Default	100.00	Units	%
Type	16 Bit User Save	Update Rate	Background read
Display Format	Standard	Decimal Places	2
Coding	RW		

See *Analog Input 1 Minimum Reference* (07.061).

Parameter	07.065 *Analog Input 2 Minimum Reference*		
Short description	Defines the minimum reference for analog input 2		
Mode	RFC-A		
Minimum	0.00	Maximum	100.00
Default	0.00	Units	%
Type	16 Bit User Save	Update Rate	Background read
Display Format	Standard	Decimal Places	2
Coding	RW		

See graph in *Analog Input 1 Minimum Reference* (07.061).

Analog Input 2 (07.002) can be scaled and limited using the following parameters:

- *Analog Input 2 Minimum Reference* (07.065)
- *Analog Input 2 At Minimum Reference* (07.066)
- *Analog Input 2 Maximum Reference* (07.067)
- *Analog Input 2 At Maximum Reference* (07.068)

Parameters above can be selected to limit the range of *Analog Input 2* (07.002) and also scale it between the minimum and maximum reference.

If *Analog Input 2 Minimum Reference* (07.065) ≥ *Analog Input 2 Maximum Reference* (07.067) then A_{i2} = 0.00% whatever the input level.

Input Level is limited between *Analog Input 2 At Minimum Reference* (07.066) and *Analog Input 2 At Maximum Reference* (07.068)

Analog Input 2 (07.002) = [(*Analog Input 2 At Maximum Reference* (07.068) - *Analog Input 2 At Minimum Reference* (07.066))/(*Analog Input 2 Maximum Reference* (07.067) - *Analog Input 2 Minimum Reference* (07.065))] x (Input level - *Analog Input 2 Minimum Reference* (07.065))+ *Analog Input 2 At Minimum Reference* (07.066).

Parameter	07.066 *Analog Input 2 At Minimum Reference*		
Short description	Defines the value of analog input 2 at minimum reference		
Mode	RFC-A		
Minimum	-100.00	Maximum	100.00
Default	0.00	Units	%
Type	16 Bit User Save	Update Rate	Background read
Display Format	Standard	Decimal Places	2
Coding	RW		

See *Analog Input 2 Minimum Reference* (07.065).

Parameter	07.067 *Analog Input 2 Maximum Reference*		
Short description	Defines the maximum reference for analog input 2		
Mode	RFC-A		
Minimum	0.00	Maximum	100.00
Default	100.00	Units	%
Type	16 Bit User Save	Update Rate	Background read
Display Format	Standard	Decimal Places	2
Coding	RW		

See *Analog Input 2 Minimum Reference* (07.065).

Parameter	07.068 *Analog Input 2 At Maximum Reference*		
Short description	Defines the value of analog input 2 at maximum reference		
Mode	RFC-A		
Minimum	-100.00	Maximum	100.00
Default	100.00	Units	%
Type	16 Bit User Save	Update Rate	Background read
Display Format	Standard	Decimal Places	2
Coding	RW		

See *Analog Input 2 Minimum Reference* (07.065).

Parameter	**07.090** ***Analog Input 1 Destination B***		
Short description	Defines the secondary destination for analog input 1		
Mode	RFC-A		
Minimum	0.000	Maximum	30.999
Default		Units	
Type	16 Bit User Save	Update Rate	Drive reset read
Display Format	Standard	Decimal Places	3
Coding	RO, DE, ND, NC, PT		

See *Analog Input 1 Destination A* (07.010).

Parameter	**07.094** ***Analog Input 2 Destination B***		
Short description	Defines the secondary destination for analog input 2		
Mode	RFC-A		
Minimum	0.000	Maximum	30.999
Default		Units	
Type	16 Bit User Save	Update Rate	Drive reset read
Display Format	Standard	Decimal Places	3
Coding	RO, DE, ND, NC, PT		

See *Analog Input 2 Destination A* (07.014).

Parameter	**07.099** ***Analog Output 1 Source B***		
Short description	Defines the secondary source for analog output 1		
Mode	RFC-A		
Minimum	0.000	Maximum	30.999
Default		Units	
Type	16 Bit User Save	Update Rate	Drive reset read
Display Format	Standard	Decimal Places	3
Coding	RO, ND, NC, PT		

See *Analog Output 1 Source A* (07.019).

Parameter	**07.102** ***Analog Output 2 Source B***		
Short description	Defines the secondary source for analog output 2		
Mode	RFC-A		
Minimum	0.000	Maximum	30.999
Default		Units	
Type	16 Bit User Save	Update Rate	Drive reset read
Display Format	Standard	Decimal Places	3
Coding	RO, ND, NC, PT		

See *Analog Output 2 Source A* (07.022).

Menu 8 Single Line Descriptions − *Digital I/O*

Mode: RFC-A

Parameter		Range	Default	Type					
08.001	Digital I/O 1 State	Off (0) or On (1)		RO	Bit	ND	NC	PT	
08.002	Digital I/O 2 State	Off (0) or On (1)		RO	Bit	ND	NC	PT	
08.003	Digital Input 3 State	Off (0) or On (1)		RO	Bit	ND	NC	PT	
08.004	Digital Input 4 State	Off (0) or On (1)		RO	Bit	ND	NC	PT	
08.005	Digital Input 5 State	Off (0) or On (1)		RO	Bit	ND	NC	PT	
08.006	Digital Input 6 State	Off (0) or On (1)		RO	Bit	ND	NC	PT	
08.007	Digital Input 7 State	Off (0) or On (1)		RO	Bit	ND	NC	PT	
08.008	Relay 1 Output State	Off (0) or On (1)		RO	Bit	ND	NC	PT	
08.010	Input Logic Polarity	Negative Logic (0), Positive Logic (1)	Positive Logic (1)	RW	Txt				US
08.011	Digital I/O 1 Invert	Not Invert (0), Invert (1)	Not Invert (0)	RW	Txt				US
08.012	Digital I/O 2 Invert	Not Invert (0), Invert (1)	Not Invert (0)	RW	Txt				US
08.013	Digital Input 3 Invert	Not Invert (0), Invert (1)	Not Invert (0)	RW	Txt				US
08.014	Digital Input 4 Invert	Not Invert (0), Invert (1)	Not Invert (0)	RW	Txt				US
08.015	Digital Input 5 Invert	Not Invert (0), Invert (1)	Not Invert (0)	RW	Txt				US
08.016	Digital Input 6 Invert	Not Invert (0), Invert (1)	Not Invert (0)	RW	Txt				US
08.017	Digital Input 7 Invert	Not Invert (0), Invert (1)	Not Invert (0)	RW	Txt				US
08.018	Relay 1 Invert	Not Invert (0), Invert (1)	Not Invert (0)	RW	Txt				US
08.020	Digital I/O Read Word	000000000000 to 100000000000		RO	Bin	ND	NC	PT	
08.021	Digital IO1 Source/Destination A	0.000 to 30.999	10.003	RW	Num	DE		PT	US
08.022	Digital IO2 Source/Destination A	0.000 to 30.999	0.000	RW	Num	DE		PT	US
08.023	Digital Input 03 Destination A	0.000 to 30.999	6.030	RW	Num	DE		PT	US
08.024	Digital Input 04 Destination A	0.000 to 30.999	6.032	RW	Num	DE		PT	US
08.025	Digital Input 05 Destination A	0.000 to 30.999	1.041	RW	Num	DE		PT	US
08.026	Digital Input 06 Destination A	0.000 to 30.999	6.031	RW	Num	DE		PT	US
08.027	Digital Input 07 Destination A	0.000 to 30.999	0.000	RW	Num	DE		PT	US
08.028	Relay 1 Output Source A	0.000 to 30.999	10.001	RW	Num			PT	US
08.031	Digital I/O 01 mode	Input (0), Output (1), Frequency output (2), PWM output (3)	Output (1)	RW	Txt				US
08.032	Digital I/O 02 mode	Input (0), Output (1)	Input (0)	RW	Txt				US
08.035	Digital input 5 mode	Digital Input (0), Therm Short Cct (1), Thermistor (2), Therm No Trip (3)	Digital Input (0)	RW	Txt				US
08.036	Digital input 6/7 mode	Digital Input (0), Frequency (1), Encoder AB (2)	Digital Input (0)	RW	Txt				US
08.039	STO Input 01 State	Off (0) or On (1)		RO	Bit	ND	NC	PT	
08.040	STO Input 02 State	Off (0) or On (1)		RO	Bit	ND	NC	PT	
08.041	Keypad Run Button State	Off (0) or On (1)		RO	Bit	ND	NC	PT	
08.042	Keypad Auxiliary Button State	Off (0) or On (1)		RO	Bit	ND	NC	PT	
08.043	24V Supply Input State	Off (0) or On (1)		RO	Bit	ND	NC	PT	
08.044	Keypad Stop Button State	Off (0) or On (1)		RO	Bit	ND	NC	PT	
08.051	Keypad Run Button Invert/Toggle	Not Invert (0), Invert (1), Toggle (2)	Not Invert (0)	RW	Txt				US
08.052	Keypad Auxiliary Button Invert/Toggle	Not Invert (0), Invert (1), Toggle (2)	Not Invert (0)	RW	Txt				US
08.053	24V Supply Input Invert	Not Invert (0), Invert (1)	Not Invert (0)	RW	Txt				US
08.061	Keypad Run Button Destination	0.000 to 30.999	0.000	RW	Num	DE		PT	US
08.062	Keypad Auxiliary Button Destination	0.000 to 30.999	0.000	RW	Num	DE		PT	US
08.063	24V Supply Input Destination	0.000 to 30.999	0.000	RW	Num	DE		PT	US
08.081	DI1 Control	0 to 26	0	RW	Num				US
08.082	DI2 Control	0 to 26	0	RW	Num				US
08.083	DI3 Control	0 to 26	0	RW	Num				US
08.084	DI4 Control	0 to 26	0	RW	Num				US
08.085	DI5 Control	0 to 26	0	RW	Num				US
08.086	DI6 Control	0 to 26	0	RW	Num				US
08.087	DI7 Control	0 to 26	0	RW	Num				US
08.091	DO1 Control	0 to 21	0	RW	Num				US
08.092	DO2 Control	0 to 21	0	RW	Num				US
08.098	Relay 1 Control	0 to 21	0	RW	Num				US
08.121	DI/O 01 Source/Destination B	0.000 to 30.999		RO	Num	DE	NC	PT	US
08.122	DI/O 02 Source/Destination B	0.000 to 30.999		RO	Num	DE	NC	PT	US
08.123	DI 03 Destination B	0.000 to 30.999		RO	Num	DE	NC	PT	US
08.124	DI 04 Destination B	0.000 to 30.999		RO	Num	DE	NC	PT	US
08.125	DI 05 Destination B	0.000 to 30.999		RO	Num	DE	NC	PT	US
08.126	DI 06 Destination B	0.000 to 30.999		RO	Num	DE	NC	PT	US
08.127	DI 07 Destination B	0.000 to 30.999		RO	Num	DE	NC	PT	US
08.128	Relay 01 Source B	0.000 to 30.999		RO	Num	ND	NC	PT	US

RW	Read / Write	RO	Read-only	Bit	Bit parameter	Txt	Text string	Date	Date parameter	Time	Time parameter
Chr	Character parameter	Bin	Binary parameter	IP	IP address	Mac	MAC address	Ver	Version number	SMP	Slot, menu, parameter
Num	Number parameter	DE	Destination	ND	No default value	RA	Rating dependent	NC	Non-copyable	PT	Protected
FI	Filtered	US	User save	PS	Power-down save						

Menu 8 − *Digital I/O*

Mode: RFC-A

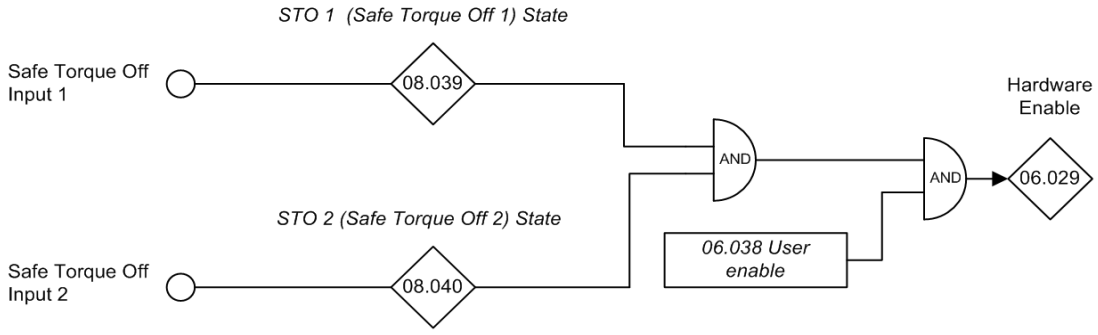

Fig.8.2: STO

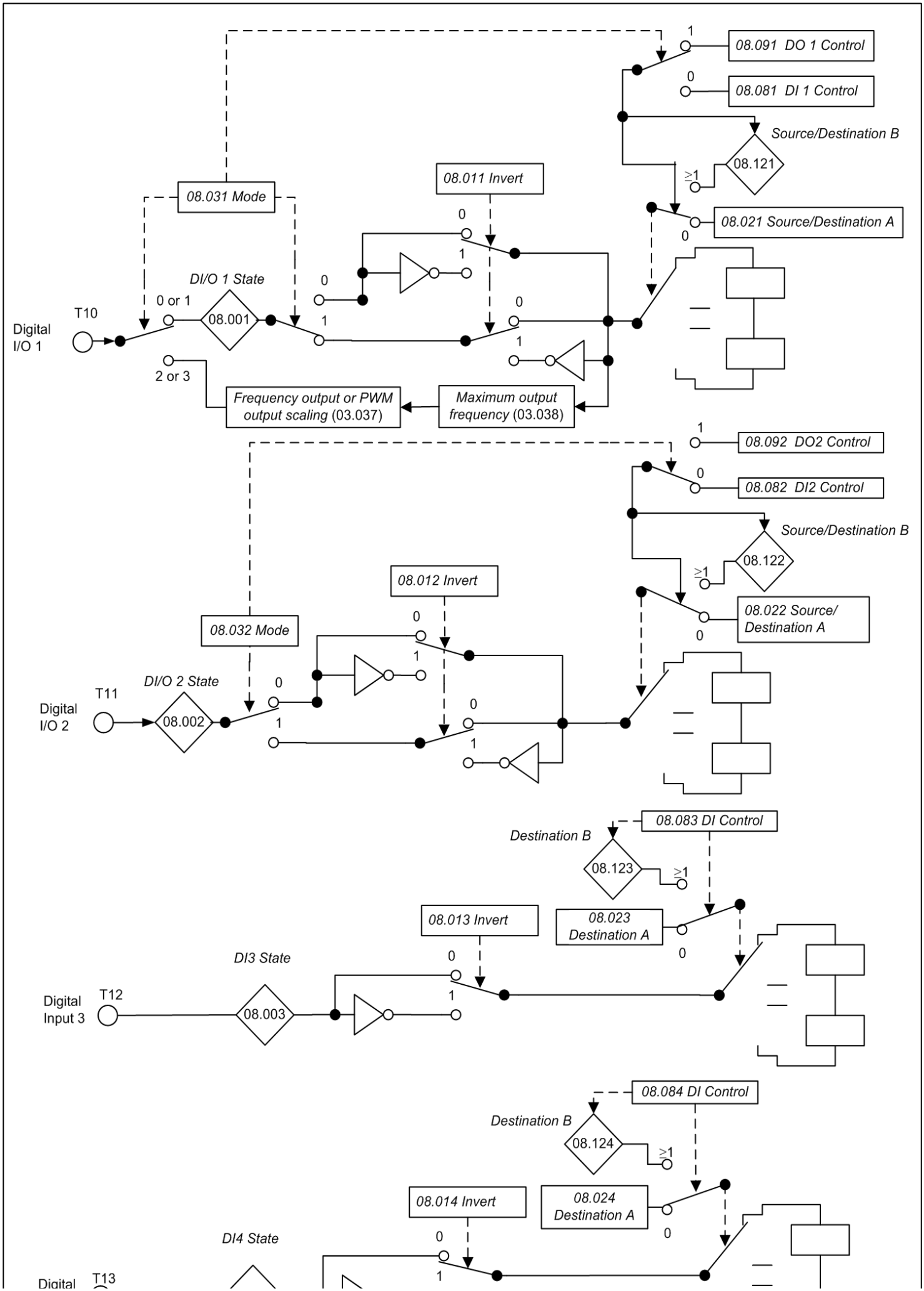
08.091 DO 1 Control
08.081 DI 1 Control
Source/Destination B
08.121
08.011 Invert
08.031 Mode
08.021 Source/Destination A
DI/O 1 State
0 or 1
08.001
T10
Digital
I/O 1
2 or 3
Frequency output or PWM output scaling (03.037)
Maximum output frequency (03.038)
08.092 DO2 Control
08.082 DI2 Control
Source/Destination B
08.122
08.012 Invert
08.032 Mode
08.022 Source/ Destination A
DI/O 2 State
T11
Digital
I/O 2
08.002
08.083 DI Control
Destination B
08.123
08.013 Invert
08.023 Destination A
DI3 State
Digital
Input 3
T12
08.003
08.084 DI Control
Destination B
08.124
08.014 Invert
08.024 Destination A
DI4 State
Digital
T13

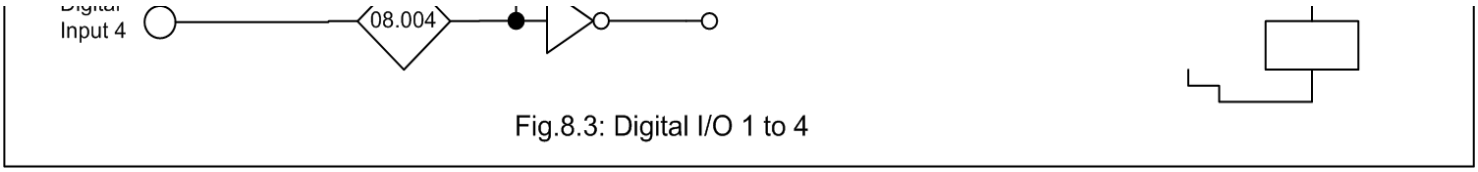

Fig.8.3: Digital I/O 1 to 4

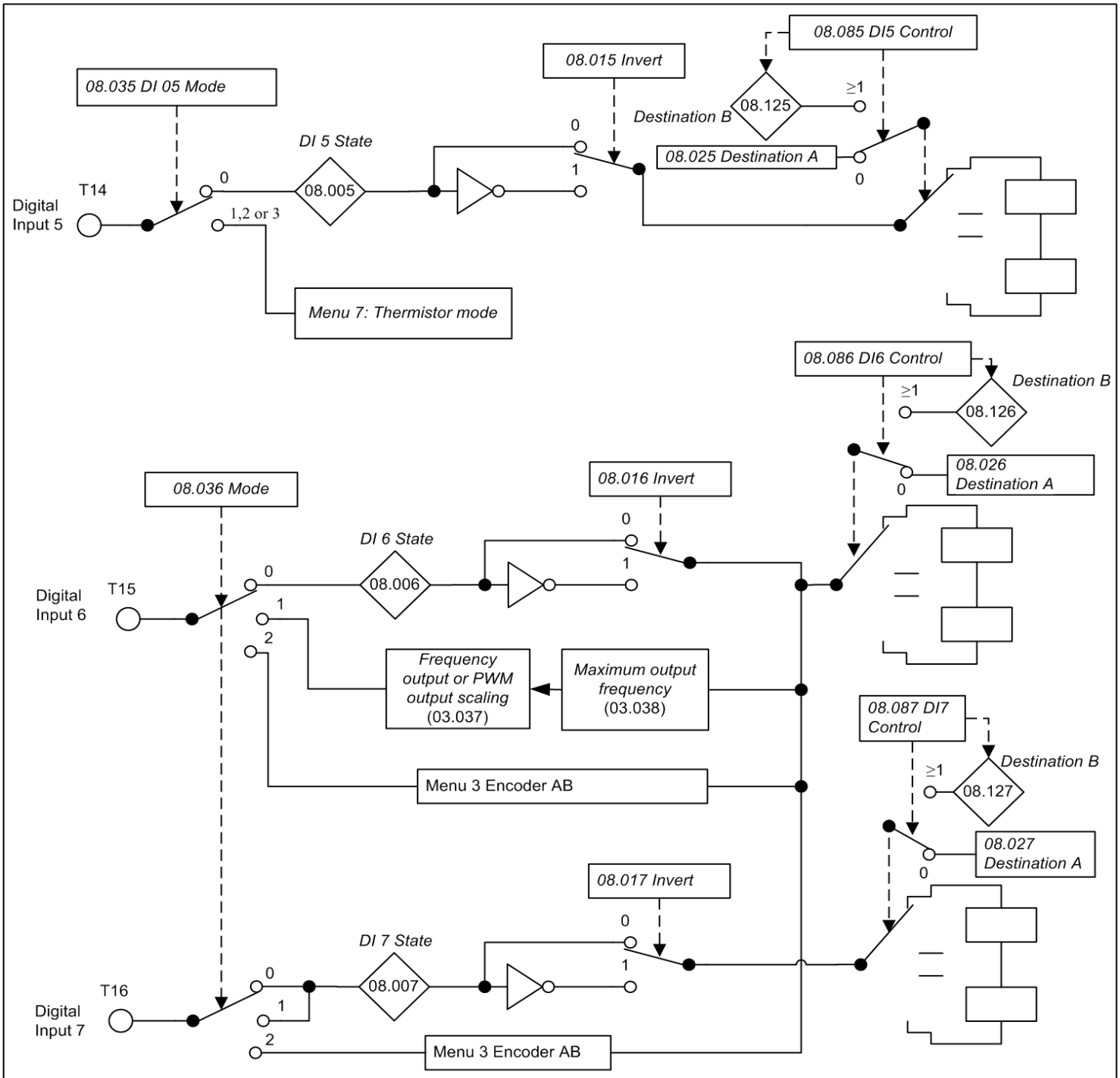

Fig.8.4: Digital Inputs 5 to 7

Parameter	08.001 *Digital I/O 1 State*		
Short description	Displays the state for digtial input/output1		
Mode	RFC-A		
Minimum	0	Maximum	1
Default		Units	
Type	1 Bit Volatile	Update Rate	1ms
Display Format	Standard	Decimal Places	0
Coding	RO, ND, NC, PT		

Digital I/O 1 State (08.001) represents the digital input/output 1 state whether it is a digital input or an output.

If *Digital I/O 01 mode* (08.031) = 0 then it is a digital input:

- Comply with IEC 61131-2. Positive or negative logic.
- *Digital I/O 1 State* (08.001) = 0 if the digital I/O is low (<9V) in positive logic *Input Logic Polarity* (08.010) = 1.
- *Digital I/O 1 State* (08.001) = 1 if the digital I/O is high (>11V) in positive logic *Input Logic Polarity* (08.010) = 1.
- *Digital I/O 1 State* (08.001) = 1 if the digital I/O is low (<9V) in negative logic *Input Logic Polarity* (08.010) = 0.

- *Digital I/O 1 State* (08.001) = 0 if the digital I/O is high (>11V) in negative logic *Input Logic Polarity* (08.010) = 0.

If *Digital I/O 01 mode* (08.031) = 1 then it is a digital output:

- 200mA total current including +24Vout; (50mA max per output).
- Positive logic only (with 6-7kΩ pull down).
- *Digital I/O 1 State* (08.001) = 0 if the source parameter value less than 50% of its range.
- *Digital I/O 1 State* (08.001) = 1 if the source parameter value more than 50% of its range.

If *Digital I/O 01 mode* (08.031) = 2 then it is a frequency output (see *Frequency Output or PWM Output Scaling* (03.037) and *Maximum Output Frequency* (03.038) for scaling and maximum output frequency options).

If *Digital I/O 01 mode* (08.031) = 3 then it is a PWM output (see *Frequency Output or PWM Output Scaling* (03.037) and *Maximum Output Frequency* (03.038) for scaling and maximum output frequency options).

Parameter	**08.002 *Digital I/O 2 State***		
Short description	Displays the state for digtial input/output 2		
Mode	RFC-A		
Minimum	0	Maximum	1
Default		Units	
Type	1 Bit Volatile	Update Rate	1ms
Display Format	Standard	Decimal Places	0
Coding	RO, ND, NC, PT		

Digital I/O 2 State (08.002) represents the digital input/output 2 state whether it is a digital input or an output.

If *Digital I/O 02 mode* (08.032) = 0 then it is a digital input:

- Comply with IEC 61131-2. Positive or negative logic.
- *Digital I/O 2 State* (08.002) = 0 if the digital I/O is low (<9V) in positive logic *Input Logic Polarity* (08.010) = 1.
- *Digital I/O 2 State* (08.002) = 1 if the digital I/O is high (>11V) in positive logic *Input Logic Polarity* (08.010) = 1.
- *Digital I/O 2 State* (08.002) = 1 if the digital I/O is low (<9V) in negative logic *Input Logic Polarity* (08.010) = 0.
- *Digital I/O 2 State* (08.002) = 0 if the digital I/O is high (>11V) in negative logic *Input Logic Polarity* (08.010) = 0.

If *Digital I/O 02 mode* (08.032) = 1 then it is a digital output:

- 200mA total current including +24Vout; (50mA max per output).
- Positive logic only (with 6-7kΩ pull down).
- *Digital I/O 2 State* (08.002) = 0 if the source parameter value less than 50% of its range.
- *Digital I/O 2 State* (08.002) = 1 if the source parameter value more than 50% of its range.

Parameter	**08.003 *Digital Input 3 State***		
Short description	Displays the state for digtial input 3		
Mode	RFC-A		
Minimum	0	Maximum	1
Default		Units	
Type	1 Bit Volatile	Update Rate	1ms
Display Format	Standard	Decimal Places	0
Coding	RO, ND, NC, PT		

Digital Input 3 State (08.003) represents the digital input 3 state.

- Comply with IEC 61131-2. Positive or negative logic.
- *Digital Input 3 State* (08.003) = 0 if the digital I/O is low (<9V) in positive logic *Input Logic Polarity* (08.010) = 1.
- *Digital Input 3 State* (08.003) = 1 if the digital I/O is high (>11V) in positive logic *Input Logic Polarity* (08.010) = 1.
- *Digital Input 3 State* (08.003) = 1 if the digital I/O is low (<9V) in negative logic *Input Logic Polarity* (08.010) = 0.
- *Digital Input 3 State* (08.003) = 0 if the digital I/O is high (>11V) in negative logic *Input Logic Polarity* (08.010) = 0.

Parameter	**08.004 *Digital Input 4 State***		
Short description	Displays the state for digtial input 4		
Mode	RFC-A		
Minimum	0	Maximum	1
Default		Units	
Type	1 Bit Volatile	Update Rate	1ms
Display Format	Standard	Decimal Places	0
Coding	RO, ND, NC, PT		

Digital Input 4 State (08.004) represents the digital input 4 state.

- Comply with IEC 61131-2. Positive or negative logic.
- *Digital Input 4 State* (08.004) = 0 if the digital I/O is low (<9V) in positive logic *Input Logic Polarity* (08.010) = 1.
- *Digital Input 4 State* (08.004) = 1 if the digital I/O is high (>11V) in positive logic *Input Logic Polarity* (08.010) = 1.
- *Digital Input 4 State* (08.004) = 1 if the digital I/O is low (<9V) in negative logic *Input Logic Polarity* (08.010) = 0.
- *Digital Input 4 State* (08.004) = 0 if the digital I/O is high (>11V) in negative logic *Input Logic Polarity* (08.010) = 0.

Parameter	**08.005 *Digital Input 5 State***		
Short description	Displays the state for digtial input 5		
Mode	RFC-A		
Minimum	0	Maximum	1
Default		Units	
Type	1 Bit Volatile	Update Rate	1ms
Display Format	Standard	Decimal Places	0
Coding	RO, ND, NC, PT		

Digital Input 5 State (08.005) represents the digital input 5 state.

- Comply with IEC 61131-2. Positive or negative logic.
- *Digital Input 5 State* (08.005) = 0 if the digital I/O is low (<9V) in positive logic *Input Logic Polarity* (08.010) = 1.
- *Digital Input 5 State* (08.005) = 1 if the digital I/O is high (>11V) in positive logic *Input Logic Polarity* (08.010) = 1.
- *Digital Input 5 State* (08.005) = 1 if the digital I/O is low (<9V) in negative logic *Input Logic Polarity* (08.010) = 0.
- *Digital Input 5 State* (08.005) = 0 if the digital I/O is high (>11V) in negative logic *Input Logic Polarity* (08.010) = 0.

This input can also be used as a thermistor input, see parameter *Digital input 5 mode* (08.035).

Parameter	08.006 *Digital Input 6 State*		
Short description	Displays the state for digtial input 6		
Mode	RFC-A		
Minimum	0	Maximum	1
Default		Units	
Type	1 Bit Volatile	Update Rate	1ms
Display Format	Standard	Decimal Places	0
Coding	RO, ND, NC, PT		

Digital Input 6 State (08.006) represents the digital input 6 state if *Digital input 6/7 mode* (08.036) = 0.

- Comply with IEC 61131-2. Positive or negative logic.
- *Digital Input 6 State* (08.006) = 0 if the digital I/O is low (<9V) in positive logic *Input Logic Polarity* (08.010) = 1.
- *Digital Input 6 State* (08.006) = 1 if the digital I/O is high (>11V) in positive logic *Input Logic Polarity* (08.010) = 1.
- *Digital Input 6 State* (08.006) = 1 if the digital I/O is low (<9V) in negative logic *Input Logic Polarity* (08.010) = 0.
- *Digital Input 6 State* (08.006) = 0 if the digital I/O is high (>11V) in negative logic *Input Logic Polarity* (08.010) = 0.

Parameter	08.007 *Digital Input 7 State*		
Short description	Displays the state for digtial input 7		
Mode	RFC-A		
Minimum	0	Maximum	1
Default		Units	
Type	1 Bit Volatile	Update Rate	1ms
Display Format	Standard	Decimal Places	0
Coding	RO, ND, NC, PT		

Digital Input 7 State (08.007) represents the digital input 7 state if *Digital input 6/7 mode* (08.036) = 0 or 1.

- Comply with IEC 61131-2. Positive logic only.
- *Digital Input 7 State* (08.007) = 0 if the digital input is low (<9V) in positive logic *Input Logic Polarity* (08.010) = 1.
- *Digital Input 7 State* (08.007) = 1 if the digital input is high (>11V) in positive logic *Input Logic Polarity* (08.010) = 1.
- *Digital Input 7 State* (08.007)= 1 if the digital I/O is low (<9V) in negative logic *Input Logic Polarity* (08.010) = 0.
- *Digital Input 7 State* (08.007)= 0 if the digital I/O is high (>11V) in negative logic *Input Logic Polarity* (08.010) = 0.

This input can also be used as the channel B input of a quadrature encoder (see *Digital input 6/7 mode* (08.036)).

It should be noted that when used as an encoder input digital inputs 6 and 7 are not differential inputs, signals switching between 0 and +24V are still required.

Parameter	08.008 *Relay 1 Output State*		
Short description	Displays the state for relay 1		
Mode	RFC-A		
Minimum	0	Maximum	1
Default		Units	
Type	1 Bit Volatile	Update Rate	1ms
Display Format	Standard	Decimal Places	0
Coding	RO, ND, NC, PT		

Relay 1 Output State (08.008) shows the state of Relay 1, 0 = Relay open, 1 = Relay closed.

Parameter	08.010 *Input Logic Polarity*		
Short description	Set to 1 to use positive logic inputs		
Mode	RFC-A		
Minimum	0	Maximum	1
Default	1	Units	
Type	8 Bit User Save	Update Rate	Background read
Display Format	Standard	Decimal Places	0
Coding	RW, TE		

Value	*Text*
0	Negative Logic
1	Positive Logic

Sets the polarity of all digital inputs.

See *Digital I/O 1 State* (08.001) to *Digital Input 7 State* (08.007).

Parameter	08.011 *Digital I/O 1 Invert*		
Short description	Set to 1 to invert digital input/output 1		
Mode	RFC-A		
Minimum	0	Maximum	1
Default	0	Units	
Type	8 Bit User Save	Update Rate	Background read
Display Format	Standard	Decimal Places	0
Coding	RW, TE		

Value	*Text*
0	Not Invert
1	Invert

A value of 0 or 1 in *Digital I/O 1 Invert* (08.011) allows the I/O state to be non-inverted(0) or inverted(1) respectively.

If *Digital I/O 01 mode* (08.031) = 0 (Input) then *Digital I/O 1 Invert* (08.011) inverts the destination parameter *Digital IO1 Source/Destination A* (08.021) or *DI/O 01 Source/Destination B* (08.121).

If *Digital I/O 01 mode* (08.031) = 1 (Output) then *Digital I/O 1 Invert* (08.011) inverts *Digital I/O 1 State* (08.001) and the voltage on the output terminal.

If *Digital I/O 01 mode* (08.031) = 2 or 3 (Frequency or PWM output) then *Digital I/O 1 Invert* (08.011) has no effect.

Parameter	08.012 *Digital I/O 2 Invert*		
Short description	Set to 1 to invert digital input/output 2		
Mode	RFC-A		
Minimum	0	Maximum	1
Default	0	Units	
Type	8 Bit User Save	Update Rate	Background read
Display Format	Standard	Decimal Places	0
Coding	RW, TE		

Value	*Text*
0	Not Invert
1	Invert

A value of 0 or 1 in *Digital I/O 2 Invert* (08.012) allows the I/O state to be non-inverted(0) or inverted(1) respectively.

If *Digital I/O 02 mode* (08.032) = 0 (Input) then *Digital I/O 2 Invert* (08.012) inverts the destination parameter *Digital IO2 Source/Destination A* (08.022) or *DI/O 02 Source/Destination B* (08.122).

If *Digital I/O 02 mode* (08.032) = 1 (Output) then *Digital I/O 2 Invert* (08.012) inverts *Digital I/O 2 State* (08.002) and the voltage on the output terminal.

Parameter	08.013 *Digital Input 3 Invert*		
Short description	Set to 1 to invert digital input 3		
Mode	RFC-A		
Minimum	0	Maximum	1
Default	0	Units	
Type	8 Bit User Save	Update Rate	Background read
Display Format	Standard	Decimal Places	0
Coding	RW, TE		

Value	*Text*
0	Not Invert
1	Invert

A value of 0 or 1 in *Digital Input 3 Invert* (08.013) allows the input state to be non-inverted(0) or inverted(1) respectively.

Digital Input 3 Invert (08.013) inverts the destination parameter *Digital Input 03 Destination A* (08.023) or *DI 03 Destination B* (08.123).

Parameter	08.014 *Digital Input 4 Invert*		
Short description	Set to 1 to invert digital input 4		
Mode	RFC-A		
Minimum	0	Maximum	1
Default	0	Units	
Type	8 Bit User Save	Update Rate	Background read
Display Format	Standard	Decimal Places	0
Coding	RW, TE		

Value	*Text*
0	Not Invert
1	Invert

A value of 0 or 1 in *Digital Input 4 Invert* (08.014) allows the input state to be non-inverted(0) or inverted(1) respectively.

Digital Input 4 Invert (08.014) inverts the destination parameter *Digital Input 04 Destination A* (08.024) or *DI 04 Destination B* (08.124).

Parameter	08.015 *Digital Input 5 Invert*		
Short description	Set to 1 to invert digital input 5		
Mode	RFC-A		
Minimum	0	Maximum	1
Default	0	Units	
Type	8 Bit User Save	Update Rate	Background read
Display Format	Standard	Decimal Places	0
Coding	RW, TE		

Value	*Text*
0	Not Invert
1	Invert

A value of 0 or 1 in *Digital Input 5 Invert* (08.015) allows the input state to be non-inverted(0) or inverted(1) respectively.

If *Digital input 5 mode* (08.035) = 0 then *Digital Input 5 Invert* (08.015) inverts the destination parameter *Digital Input 05 Destination A* (08.025) or *DI 05 Destination B* (08.125).

If *Digital input 5 mode* (08.035) > 0 then *Digital Input 5 Invert* (08.015) has no effect.

Parameter	08.016 *Digital Input 6 Invert*		
Short description	Set to 1 to invert digital input 6		
Mode	RFC-A		
Minimum	0	Maximum	1
Default	0	Units	
Type	8 Bit User Save	Update Rate	Background read
Display Format	Standard	Decimal Places	0
Coding	RW, TE		

Value	*Text*
0	Not Invert
1	Invert

A value of 0 or 1 in *Digital Input 6 Invert* (08.016) allows the input state to be non-inverted(0) or inverted(1) respectively.

If *Digital input 6/7 mode* (08.036) = 0 then *Digital Input 6 Invert* (08.016) inverts the destination parameter *Digital Input 06 Destination A* (08.026) or *DI 06 Destination B* (08.126).

If *Digital input 6/7 mode* (08.036) > 0 then *Digital Input 6 Invert* (08.016) has no effect.

Parameter	08.017 *Digital Input 7 Invert*		
Short description	Set to 1 to invert digital input 7		
Mode	RFC-A		
Minimum	0	Maximum	1
Default	0	Units	
Type	8 Bit User Save	Update Rate	Background read
Display Format	Standard	Decimal Places	0
Coding	RW, TE		

Value	*Text*
0	Not Invert
1	Invert

A value of 0 or 1 in *Digital Input 7 Invert* (08.017) allows the input state to be non-inverted(0) or inverted(1) respectively.

If *Digital input 6/7 mode* (08.036) = 0 or 1 then *Digital Input 7 Invert* (08.017) inverts the destination parameter *Digital Input 07 Destination A* (08.027) or *DI 07 Destination B* (08.127).

If *Digital input 6/7 mode* (08.036) = 2 then *Digital Input 7 Invert* (08.017) has no effect.

Parameter	08.018 *Relay 1 Invert*		
Short description	Set to 1 to invert relay 1		
Mode	RFC-A		
Minimum	0	Maximum	1
Default	0	Units	
Type	8 Bit User Save	Update Rate	Background read
Display Format	Standard	Decimal Places	0
Coding	RW, TE		

Value	*Text*
0	Not Invert
1	Invert

A value of 0 or 1 in *Relay 1 Invert* (08.018) allows the input state to be non-inverted(0) or inverted(1) respectively.

Parameter	08.020 *Digital I/O Read Word*		
Short description	Displays the states for the digital I/O		
Mode	RFC-A		
Minimum	0 (Display: 000000000000)	Maximum	2048 (Display: 100000000000)
Default		Units	
Type	16 Bit Volatile	Update Rate	Background write
Display Format	Binary	Decimal Places	0
Coding	RO, ND, NC, PT		

Digital I/O Read Word (08.020) reflects the state of DI/O 01 to DI 07, both STO inputs and the relay as given below. Each bit matches the value of the state parameter for the respective digital input or output so the bit value for digital inputs will be the state of the actual input before any inversion selections are applied. The bit value for digital outputs will include the state inversion if selected in the invert parameter for the output.

Name	*Digital I/O Read Word* (08.020) bit
DI/O 01	0
DI/O 02	1
DI 03	2
DI 04	3
DI 05	4
DI 06	5
DI 07	6
STO 01	7
STO 02	8
RLY 01	9
Reserved	10

Parameter	08.021 *Digital IO1 Source/Destination A*		
Short description	Defines the source or destination parameter for digital I/O 1		
Mode	RFC-A		
Minimum	0.000	Maximum	30.999
Default	10.003	Units	
Type	16 Bit User Save	Update Rate	Drive Reset Read
Display Format	Standard	Decimal Places	3
Coding	RW, DE, PT		

Digital IO1 Source/Destination A (08.021) provides the destination parameter if DI/O 1 is an input when *Digital I/O 01 mode* (08.031) = 0, and *DI1 Control* (08.081) is at it's default value of 0.

Digital IO1 Source/Destination A (08.021) provides the source parameter if DI/O 1 is an output when *Digital I/O 01 mode* (08.031) ≥ 1,and *DO1 Control* (08.091) is at it's default value of 0.

Parameter	08.022 *Digital IO2 Source/Destination A*		
Short description	Defines the source or destination parameter for digital I/O 2		
Mode	RFC-A		
Minimum	0.000	Maximum	30.999
Default	0.000	Units	
Type	16 Bit User Save	Update Rate	Drive Reset Read
Display Format	Standard	Decimal Places	3
Coding	RW, DE, PT		

Digital IO2 Source/Destination A (08.022) provides the destination parameter if DI/O 2 is an input when *Digital I/O 02 mode* (08.032) = 0 and *DI2 Control* (08.082) is at its default value of 0.

Digital IO2 Source/Destination A (08.022) provides the source parameter if DI/O 2 is an output when *Digital I/O 02 mode* (08.032) = 1 and *DO2 Control* (08.092) is at its default value of 0.

Parameter	08.023 *Digital Input 03 Destination A*		
Short description	Defines the destination parameter for digital Input 3		
Mode	RFC-A		
Minimum	0.000	Maximum	30.999
Default	6.030	Units	
Type	16 Bit User Save	Update Rate	Drive Reset Read
Display Format	Standard	Decimal Places	3
Coding	RW, DE, PT		

Digital Input 03 Destination A (08.023) provides the destination parameter if *DI3 Control* (08.083) is at its default value of 0.

Parameter	08.024 *Digital Input 04 Destination A*		
Short description	Defines the destination parameter for digital input 4		
Mode	RFC-A		
Minimum	0.000	Maximum	30.999
Default	6.032	Units	
Type	16 Bit User Save	Update Rate	Drive Reset Read
Display Format	Standard	Decimal Places	3
Coding	RW, DE, PT		

Digital Input 04 Destination A (08.024) provides the destination parameter if *DI4 Control* (08.084) is at its default value of 0.

Parameter	08.025 *Digital Input 05 Destination A*		
Short description	Defines the destination parameter for digital input 5		
Mode	RFC-A		
Minimum	0.000	Maximum	30.999
Default	1.041	Units	
Type	16 Bit User Save	Update Rate	Drive Reset Read
Display Format	Standard	Decimal Places	3
Coding	RW, DE, PT		

Digital Input 05 Destination A (08.025) provides the destination parameter if *DI5 Control* (08.085) is at its default value of 0.

Parameter	08.026 *Digital Input 06 Destination A*		
Short description	Defines the destination parameter for digital input 6		
Mode	RFC-A		
Minimum	0.000	Maximum	30.999
Default	6.031	Units	
Type	16 Bit User Save	Update Rate	Drive Reset Read
Display Format	Standard	Decimal Places	3
Coding	RW, DE, PT		

Digital Input 06 Destination A (08.026) provides the destination parameter if *DI6 Control* (08.086) is at its default value of 0.

Parameter	08.027 *Digital Input 07 Destination A*		
Short description	Defines the destination parameter for digital input 7		
Mode	RFC-A		
Minimum	0.000	Maximum	30.999
Default	0.000	Units	
Type	16 Bit User Save	Update Rate	Drive Reset Read
Display Format	Standard	Decimal Places	3
Coding	RW, DE, PT		

Digital Input 07 Destination A (08.027) provides the destination parameter if *DI7 Control* (08.087) is at its default value of 0.

Parameter	08.028 *Relay 1 Output Source A*		
Short description	Defines the source parameter for relay 1		
Mode	RFC-A		
Minimum	0.000	Maximum	30.999
Default	10.001	Units	
Type	16 Bit User Save	Update Rate	Drive Reset Read
Display Format	Standard	Decimal Places	3
Coding	RW, PT		

Relay 1 Output Source A (08.028) provides the source parameter if *Relay 1 Control* (08.098) is at its default value of 0.

Parameter	08.031 *Digital I/O 01 mode*		
Short description	Defines the mode for the functionality of digital input/output 1		
Mode	RFC-A		
Minimum	0	Maximum	3
Default	1	Units	
Type	8 Bit User Save	Update Rate	Background read
Display Format	Standard	Decimal Places	0
Coding	RW, TE		

Value	*Text*	*Description*
0	Input	Digital input
1	Output	Digital output
2	Frequency output	Frequency output
3	PWM output	PWM output

This parameter selects the function of input/output DI/O 1.

See also *Digital I/O 1 State* (08.001).

Parameter	08.032 *Digital I/O 02 mode*		
Short description	Defines the mode for the functionality of digital input/output 2		
Mode	RFC-A		
Minimum	0	Maximum	1
Default	0	Units	
Type	8 Bit User Save	Update Rate	Background read
Display Format	Standard	Decimal Places	0
Coding	RW, TE		

Value	*Text*	*Description*
0	Input	Digital Input
1	Output	Digital Output

This parameter selects the function of input/output DI/O 2.

See also *Digital I/O 2 State* (08.002).

Parameter	08.035 *Digital input 5 mode*		
Short description	Defines the function for digital input 5		
Mode	RFC-A		
Minimum	0	Maximum	3
Default	0	Units	
Type	8 Bit User Save	Update Rate	Background read
Display Format	Standard	Decimal Places	0
Coding	RW, TE		

Value	*Text*	*Description*
0	Digital Input	Input
1	Therm Short Cct	Temperature measurement input with short circuit detection (Resistance <50Ohm)
2	Thermistor	Temperature measurement input with Thermistor trip, but without short circuit detection
3	Therm No Trip	Temperature measurement input with no trips

This parameter selects the function of input DI 05.

For digital input operation see *Digital Input 5 State* (08.005).

For operation as a thermistor input see *Thermistor Type* (07.046) and *Thermistor Feedback* (07.047).

The motor thermistor should be connected between terminal 14 and terminal 1 (0 V).

Parameter	08.036 *Digital input 6/7 mode*		
Short description	Defines the function for digital inputs 6 and 7		
Mode	RFC-A		
Minimum	0	Maximum	2
Default	0	Units	
Type	8 Bit User Save	Update Rate	Background read
Display Format	Standard	Decimal Places	0
Coding	RW, TE		

Value	*Text*
0	Digital Input
1	Frequency
2	Encoder AB

This parameter selects the function of input DI 6 and 7.

See also *Digital Input 6 State* (08.006) and *Digital Input 7 State* (08.007).

If *Digital input 6/7 mode* (08.036) = 0, DI 06 and DI 07 are both digital inputs.

If *Digital input 6/7 mode* (08.036) = 1, DI 06 is selected as frequency input. See *Position* (03.029) for more details. DI 07 is selected as digital input.

If *Digital input 6/7 mode* (08.036) = 2, both input DI 06 and DI 07 are encoder inputs. DI 06 is channel A and DI 07 is channel B. See *Position* (03.029) for more details.

Parameter	08.039 *STO Input 01 State*		
Short description	Displays the state of safe torque off channel 1		
Mode	RFC-A		
Minimum	0	Maximum	1
Default		Units	
Type	1 Bit Volatile	Update Rate	1ms
Display Format	Standard	Decimal Places	0
Coding	RO, ND, NC, PT		

STO 01 and STO 02 correspond to two safe torque off channels within the drive.

Both channels must be in the high state for the drive to be enabled. The state parameters are 0 (OFF), if the digital input is low or 1 (ON) if the digital input is high

Parameter	08.040 *STO Input 02 State*		
Short description	Displays the state of safe torque off channel 2		
Mode	RFC-A		
Minimum	0	Maximum	1
Default		Units	
Type	1 Bit Volatile	Update Rate	1ms
Display Format	Standard	Decimal Places	0
Coding	RO, ND, NC, PT		

See *STO Input 01 State* (08.039).

Parameter	08.041 *Keypad Run Button State*		
Short description	Displays the state for the Keypad Run Forward button		
Mode	RFC-A		
Minimum	0	Maximum	1
Default		Units	
Type	1 Bit Volatile	Update Rate	Background read
Display Format	Standard	Decimal Places	0
Coding	RO, ND, NC, PT		

Digital Input 11 (Keypad Run Button), Digital Input 12 (Keypad Auxiliary Button) and Digital Input 14 (Keypad Stop Button) represent the state of the Run, Auxiliary and Stop buttons on any keypad fitted or connected to the drive; the input state is determined by OR'ing the state of the button on each keypad connected to the drive, if the button is pressed the state parameter is one otherwise it is zero. If a keypad is not fitted the state parameters are zero.

Parameter	08.042 *Keypad Auxiliary Button State*		
Short description	Displays the state for the Keypad Auxilary button		
Mode	RFC-A		
Minimum	0	Maximum	1
Default		Units	
Type	1 Bit Volatile	Update Rate	Background read
Display Format	Standard	Decimal Places	0
Coding	RO, ND, NC, PT		

See *Keypad Run Button State* (08.041).

Parameter	08.043 *24V Supply Input State*		
Short description	Displays the state for the 24V Supply Input		
Mode	RFC-A		
Minimum	0	Maximum	1
Default		Units	
Type	1 Bit Volatile	Update Rate	Background write
Display Format	Standard	Decimal Places	0
Coding	RO, ND, NC, PT		

Digital Input 13 (24V Supply Input) is an external 24V supply input that is monitored and can be used as a 24V digital input if an external 24V supply is not required. The state parameter is low for the voltage range from 0V to 17V and high for the voltage range above 18V. As the input is a power supply it will consume significant current if the level is taken above 24V when the drive is running from its internal power supply, or at any voltage level if this input is the only power supply to the drive. The 24V Input is available on the AI SD card adaptor. The 24V alarm is triggered if *24V Loss Alarm Enable* (11.098) = 1 and *24V Supply Input State* (08.043) = 0.

Parameter	08.044 *Keypad Stop Button State*		
Short description	Displays the state for the Keypad Stop button		
Mode	RFC-A		
Minimum	0	Maximum	1
Default		Units	
Type	1 Bit Volatile	Update Rate	Background write
Display Format	Standard	Decimal Places	0
Coding	RO, ND, NC, PT		

See *Keypad Run Button State* (08.041).

Parameter	08.051 *Keypad Run Button Invert/Toggle*		
Short description	Set to invert/toggle Keypad Run Button		
Mode	RFC-A		
Minimum	0	Maximum	2
Default	0	Units	
Type	8 Bit User Save	Update Rate	Background read
Display Format	Standard	Decimal Places	0
Coding	RW, TE		

Value	*Text*
0	Not Invert
1	Invert
2	Toggle

When a button state is used to change a parameter (see *Keypad Run Button Destination* (08.061)) the state can be used in any one of modes selected by *Keypad Run Button Invert/Toggle* (08.051).

0 The parameter will be the same as the input state.

1 The parameter will be the inverse of the input state.

2 The parameter will toggle each time the state transitions from 0 to 1.

Parameter	08.052 *Keypad Auxiliary Button Invert/Toggle*		
Short description	Set to invert/toggle Keypad Auxiliary Button		
Mode	RFC-A		
Minimum	0	Maximum	2
Default	0	Units	
Type	8 Bit User Save	Update Rate	Background read
Display Format	Standard	Decimal Places	0
Coding	RW, TE		

Value	*Text*
0	Not Invert
1	Invert
2	Toggle

When a button state is used to change a parameter (see *Keypad Auxiliary Button Destination* (08.062)) the state can be used in any one of modes selected by *Keypad Auxiliary Button Invert/Toggle* (08.052).

0 The parameter will be the same as the input state.

1 The parameter will be the inverse of the input state.

2 The parameter will toggle each time the state transitions from 0 to 1.

Parameter	08.053 *24V Supply Input Invert*		
Short description	Set to invert 24V Supply Input		
Mode	RFC-A		
Minimum	0	Maximum	1
Default	0	Units	
Type	8 Bit User Save	Update Rate	Drive Reset Read
Display Format	Standard	Decimal Places	0
Coding	RW, TE		

Value	*Text*
0	Not Invert
1	Invert

When a button state is used to change a parameter (see *24V Supply Input Destination* (08.063)) the state can be used in any one of modes selected by *24V Supply Input Invert* (08.053).

0 The parameter will be the same as the input state.

1 The parameter will be the inverse of the input state.

Parameter	08.061 *Keypad Run Button Destination*		
Short description	Defines the destination parameter for digital input 11		
Mode	RFC-A		
Minimum	0.000	Maximum	30.999
Default	0.000	Units	
Type	16 Bit User Save	Update Rate	Drive Reset Read
Display Format	Standard	Decimal Places	3
Coding	RW, DE, PT		

This destination parameter provides the routing for the Keypad Run (DI 11) input, see *Keypad Run Button Invert/Toggle* (08.051).

Parameter	08.062 *Keypad Auxiliary Button Destination*		
Short description	Defines the destination parameter for digital input 12		
Mode	RFC-A		
Minimum	0.000	Maximum	30.999
Default	0.000	Units	
Type	16 Bit User Save	Update Rate	Drive Reset Read
Display Format	Standard	Decimal Places	3
Coding	RW, DE, PT		

This destination parameter provides the routing for the Keypad Auxiliary (DI 12) input, see *Keypad Auxiliary Button Invert/Toggle* (08.052).

The Auxiliary button is available on the remote KI-Keypad.

Parameter	08.063 *24V Supply Input Destination*		
Short description	Defines the destination paramter for DI 13		
Mode	RFC-A		
Minimum	0.000	Maximum	30.999
Default	0.000	Units	
Type	16 Bit User Save	Update Rate	Drive Reset Read
Display Format	Standard	Decimal Places	3
Coding	RW, DE, PT, BU		

This destination parameter provides the routing for the 24V (DI 13) input, see *24V Supply Input Invert* (08.053).

The 24V Input is available on the AI SD card adaptor and the AI 485 Backup adaptor.

Parameter	08.081 *DI1 Control*		
Short description	Defines the behaviour of digital input 1		
Mode	RFC-A		
Minimum	0	Maximum	26
Default	0	Units	
Type	8 Bit User Save	Update Rate	Drive reset read
Display Format	Standard	Decimal Places	0
Coding	RW		

Value	Description	DI/O xx Source/Destination B	Other setup
0	User defined by *Digital IO1 Source/Destination A* (08.021) to *Digital Input 07 Destination A* (08.027)	00.000	
1	Multi preset ref selection 1	01.045	
2	Multi preset ref selection 2	01.046	
3	Multi preset ref selection 3	01.047	
4	External stop command	06.039	
5	Acc time selection 1	02.032	
6	Acc time selection 2	02.033	
7	Acc time selection 3	02.034	
8	Speed control and torque control switcher	04.011	
9	External fault N.C. contact input	10.032	
10	External reset	10.033	
11	External jog fwd	06.031	
12	External jog rev	06.037	
13	Drive enable	06.015	
14	Ramp hold	02.003	
15	RUN FWD	06.030	
16	RUN REV	06.032	
17	3-line run control (Latching)	06.040	
18	Forward limit switch	06.035	
19	Reverse limit switch	06.036	
20	Main ref channel selection 3	01.043	
21	Main ref channel selection 2	01.042	
22	Main ref channel selection 3	01.041	
23	PID1 Enable	14.008	
24	Motor 1/2 switcher	11.045	
25	Motorised pot UP	09.026	
26	Motorised pot DOWN	09.027	

This offers a simple control of *DI/O 01 Source/Destination B* (08.121) to *DI 07 Destination B* (08.127), to change the digital input destination.If *DIx Control* (08.08x) is ≥ 1 then the destination is defined by *DI/O 0x Source/Destination B* (08.12x). *DI/O 0x Source/Destination B* (08.12x) is written by *DIx Control* (08.08x) selection. (e.g. If *DI1 Control* (08.081) = 9 then *DI/O 01 Source/Destination B* (08.121) = 10.032).

If *DIx Control* (08.08x) is 0 then the destination is defined by *DI/O 0x Source/Destination A* (08.02x).

Parameter	**08.082** ***DI2 Control***		
Short description	Defines the behaviour of digital input 2		
Mode	RFC-A		
Minimum	0	Maximum	26
Default	0	Units	
Type	8 Bit User Save	Update Rate	Drive reset read
Display Format	Standard	Decimal Places	0
Coding	RW		

See *DI1 Control* (08.081).

Parameter	**08.083** ***DI3 Control***		
Short description	Defines the behaviour of digital input 3		
Mode	RFC-A		
Minimum	0	Maximum	26
Default	0	Units	
Type	8 Bit User Save	Update Rate	Drive reset read
Display Format	Standard	Decimal Places	0
Coding	RW		

See *DI1 Control* (08.081).

Parameter	**08.084** ***DI4 Control***		
Short description	Defines the behaviour of digital input 4		
Mode	RFC-A		
Minimum	0	Maximum	26
Default	0	Units	
Type	8 Bit User Save	Update Rate	Drive reset read
Display Format	Standard	Decimal Places	0
Coding	RW		

See *DI1 Control* (08.081).

Parameter	**08.085** ***DI5 Control***		
Short description	Defines the behaviour of digital input 5		
Mode	RFC-A		
Minimum	0	Maximum	26
Default	0	Units	
Type	8 Bit User Save	Update Rate	Drive reset read
Display Format	Standard	Decimal Places	0
Coding	RW		

See *DI1 Control* (08.081).

Parameter	08.086 *DI6 Control*		
Short description	Defines the behaviour of digital input 6		
Mode	RFC-A		
Minimum	0	Maximum	26
Default	0	Units	
Type	8 Bit User Save	Update Rate	Drive reset read
Display Format	Standard	Decimal Places	0
Coding	RW		

Only available on M400.

See *DI1 Control* (08.081).

Parameter	08.087 *DI7 Control*		
Short description	Defines the behaviour of digital input 7		
Mode	RFC-A		
Minimum	0	Maximum	26
Default	0	Units	
Type	8 Bit User Save	Update Rate	Drive reset read
Display Format	Standard	Decimal Places	0
Coding	RW		

Only available on M400.

See *DI1 Control* (08.081).

Parameter	08.091 *DO1 Control*		
Short description	Defines the behaviour of digital output 1		
Mode	RFC-A		
Minimum	0	Maximum	21
Default	0	Units	
Type	8 Bit User Save	Update Rate	Drive reset read
Display Format	Standard	Decimal Places	0
Coding	RW		

Value	Description	***DI/O 01 Source/Destination B* (08.121),** *DI/O 02 Source/Destination B* (08.122) **or *Relay 01 Source B* (08.128)**
0	User defined by *Digital IO1 Source/Destination A* (08.021), *Digital IO2 Source/Destination A* (08.022) or *Relay 1 Output Source A* (08.028)	00.000
1	Drive Active	10.002
2	Frequency arrived signal (FAR)	10.006 (at frequency)
3	Reserved	Reserved
4	Reserved	Reserved
5	Overload detection signal (OL)	10.017
6	Under Voltage (Power off state)	10.016
7	External fault stop (EXT)	10.032
8	Above set Frequency	10.007
9	Below set Frequency	10.004
10	Drive running at zero frequency	10.003
11	Reserved	Reserved
12	Reserved	Reserved
13	Reserved	Reserved
14	Drive (RDY)	10.090
15	Drive healthy	10.001
16	Reserved	Reserved
17	Reserved	Reserved
18	Brake release	12.040
19	In Current limit	10.009
20	Reverse direction running	10.014
21	Motor 2 selected	11.045

This offers a simple control of parameter *DI/O 01 Source/Destination B* (08.121), *DI/O 02 Source/Destination B* (08.122) or *Relay 01 Source B* (08.128) to change the source.

If the control parameter (08.09x) is ≥ 1 then the source is defined by the relevant source parameter B (08.12x). The source parameter is written by the control selection. (e.g. If *DO1 Control* (08.091) = 10 then *DI/O 01 Source/Destination B* (08.121) = 10.003)

If the control parameter is 0 then the source is defined by the relevant source parameter A (08.02x).

Parameter	08.092 *DO2 Control*		
Short description	Defines the behaviour of digital output 2		
Mode	RFC-A		
Minimum	0	Maximum	21
Default	0	Units	
Type	8 Bit User Save	Update Rate	Drive reset read
Display Format	Standard	Decimal Places	0
Coding	RW		

See *DO1 Control* (08.091).

Parameter	08.098 *Relay 1 Control*		
Short description	Defines the behaviour of relay 1		
Mode	RFC-A		
Minimum	0	Maximum	21
Default	0	Units	
Type	8 Bit User Save	Update Rate	Action on exit from edit and reset
Display Format	Standard	Decimal Places	0
Coding	RW		

See *DO1 Control* (08.091).

Parameter	08.121 *DI/O 01 Source/Destination B*		
Short description	Defines the secondary source or destination parameter for digital input/output 1		
Mode	RFC-A		
Minimum	0.000	Maximum	30.999
Default		Units	
Type	16 Bit User Save	Update Rate	Drive Reset Read
Display Format	Standard	Decimal Places	3
Coding	RO, DE, ND, NC, PT		

Refer to control parameters (*DI1 Control* (08.081) and *DO1 Control* (08.091)) for more information.

Parameter	08.122 *DI/O 02 Source/Destination B*		
Short description	Defines the secondary source or destination parameter for digital input/output 2		
Mode	RFC-A		
Minimum	0.000	Maximum	30.999
Default		Units	
Type	16 Bit User Save	Update Rate	Drive Reset Read
Display Format	Standard	Decimal Places	3
Coding	RO, DE, ND, NC, PT		

Refer to control parameters (*DI1 Control* (08.081) and *DO1 Control* (08.091)) for more information.

Parameter	08.123 *DI 03 Destination B*		
Short description	Defines the secondary destination parameter for digital input 3		
Mode	RFC-A		
Minimum	0.000	Maximum	30.999
Default		Units	
Type	16 Bit User Save	Update Rate	Drive Reset Read
Display Format	Standard	Decimal Places	3
Coding	RO, DE, ND, NC, PT		

Refer to control parameters (*DI1 Control* (08.081) for more information.

Parameter	08.124 *DI 04 Destination B*		
Short description	Defines the secondary destination parameter for digital input 4		
Mode	RFC-A		
Minimum	0.000	Maximum	30.999
Default		Units	
Type	16 Bit User Save	Update Rate	Drive Reset Read
Display Format	Standard	Decimal Places	3
Coding	RO, DE, ND, NC, PT		

Refer to control parameters (*DI1 Control* (08.081) for more information.

Parameter	08.125 *DI 05 Destination B*		
Short description	Defines the secondary destination parameter for digital input 5		
Mode	RFC-A		
Minimum	0.000	Maximum	30.999
Default		Units	
Type	16 Bit User Save	Update Rate	Drive Reset Read
Display Format	Standard	Decimal Places	3
Coding	RO, DE, ND, NC, PT		

Refer to control parameters (*DI1 Control* (08.081) for more information.

Parameter	08.126 *DI 06 Destination B*		
Short description	Defines the secondary destination parameter for digital input 6		
Mode	RFC-A		
Minimum	0.000	Maximum	30.999
Default		Units	
Type	16 Bit User Save	Update Rate	Drive Reset Read
Display Format	Standard	Decimal Places	3
Coding	RO, DE, ND, NC, PT		

Refer to control parameters (*DI1 Control* (08.081) for more information.

Parameter	08.127 *DI 07 Destination B*		
Short description	Defines the secondary destination parameter for digital input 7		
Mode	RFC-A		
Minimum	0.000	Maximum	30.999
Default		Units	
Type	16 Bit User Save	Update Rate	Drive Reset Read
Display Format	Standard	Decimal Places	3
Coding	RO, DE, ND, NC, PT		

Refer to control parameters (*DI1 Control* (08.081) for more information.

Parameter	08.128 *Relay 01 Source B*		
Short description	Defines the secondary source parameter for relay 1		
Mode	RFC-A		
Minimum	0.000	Maximum	30.999
Default		Units	
Type	16 Bit User Save	Update Rate	Drive Reset Read
Display Format	Standard	Decimal Places	3
Coding	RO, ND, NC, PT		

See *DO1 Control* (08.091).

Menu 9 Single Line Descriptions − *User Functions 1*

Mode: RFC-A

Parameter		Range	Default	Type					
09.001	Logic Function 1 Output	Off (0) or On (1)		RO	Bit	ND	NC	PT	
09.002	Logic Function 2 Output	Off (0) or On (1)		RO	Bit	ND	NC	PT	
09.003	Motorised Pot Output	±100.00 %		RO	Num	ND	NC	PT	PS
09.004	Logic Function 1 Source 1	0.000 to 30.999	0.000	RW	Num			PT	US
09.005	Logic Function 1 Source 1 Invert	Off (0) or On (1)	Off (0)	RW	Bit				US
09.006	Logic Function 1 Source 2	0.000 to 30.999	0.000	RW	Num			PT	US
09.007	Logic Function 1 Source 2 Invert	Off (0) or On (1)	Off (0)	RW	Bit				US
09.008	Logic Function 1 Output Invert	Off (0) or On (1)	Off (0)	RW	Bit				US
09.009	Logic Function 1 Delay	±25.0 s	0.0 s	RW	Num				US
09.010	Logic Function 1 Destination	0.000 to 30.999	0.000	RW	Num	DE		PT	US
09.014	Logic Function 2 Source 1	0.000 to 30.999	0.000	RW	Num			PT	US
09.015	Logic Function 2 Source 1 Invert	Off (0) or On (1)	Off (0)	RW	Bit				US
09.016	Logic Function 2 Source 2	0.000 to 30.999	0.000	RW	Num			PT	US
09.017	Logic Function 2 Source 2 Invert	Off (0) or On (1)	Off (0)	RW	Bit				US
09.018	Logic Function 2 Output Invert	Off (0) or On (1)	Off (0)	RW	Bit				US
09.019	Logic Function 2 Delay	±25.0 s	0.0 s	RW	Num				US
09.020	Logic Function 2 Destination	0.000 to 30.999	0.000	RW	Num	DE		PT	US
09.021	Motorised Pot Mode	0 to 4	0	RW	Num				US
09.022	Motorised Pot Bipolar Select	Off (0) or On (1)	Off (0)	RW	Bit				US
09.023	Motorised Pot Rate	0 to 250 s	20 s	RW	Num				US
09.024	Motorised Pot Scaling	0.000 to 4.000	1.000	RW	Num				US
09.025	Motorised Pot Destination	0.000 to 30.999	0.000	RW	Num	DE		PT	US
09.026	Motorised Pot Up	Off (0) or On (1)	Off (0)	RW	Bit		NC		
09.027	Motorised Pot Down	Off (0) or On (1)	Off (0)	RW	Bit		NC		
09.028	Motorised Pot Reset	Off (0) or On (1)	Off (0)	RW	Bit		NC		
09.029	Binary Sum Ones	Off (0) or On (1)	Off (0)	RW	Bit				
09.030	Binary Sum Twos	Off (0) or On (1)	Off (0)	RW	Bit				
09.031	Binary Sum Fours	Off (0) or On (1)	Off (0)	RW	Bit				
09.032	Binary Sum Output	0 to 255		RO	Num	ND	NC	PT	
09.033	Binary Sum Destination	0.000 to 30.999	0.000	RW	Num	DE		PT	US
09.034	Binary Sum Offset	0 to 248	0	RW	Num				US
09.035	Timer 1 Start Date	00-00-00 to 31-12-99	00-00-00	RW	Date				US
09.036	Timer 1 Start Time	00:00:00 to 23:59:59	00:00:00	RW	Time				US
09.037	Timer 1 Stop Date	00-00-00 to 31-12-99	00-00-00	RW	Date				US
09.038	Timer 1 Stop Time	00:00:00 to 23:59:59	00:00:00	RW	Time				US
09.039	Timer 1 Repeat Function	None (0), Hour (1), Day (2), Week (3), Month (4), Year (5), One off (6), Minute (7)	None (0)	RW	Txt				US
09.040	Timer 1 Enable	Off (0) or On (1)	Off (0)	RW	Bit				US
09.041	Timer 1 Invert	Off (0) or On (1)	Off (0)	RW	Bit				US
09.042	Timer 1 Output	Off (0) or On (1)		RO	Bit	ND	NC	PT	
09.043	Timer 1 Destination	0.000 to 30.999	0.000	RW	Num	DE		PT	US
09.045	Timer 2 Start Date	00-00-00 to 31-12-99	00-00-00	RW	Date				US
09.046	Timer 2 Start Time	00:00:00 to 23:59:59	00:00:00	RW	Time				US
09.047	Timer 2 Stop Date	00-00-00 to 31-12-99	00-00-00	RW	Date				US
09.048	Timer 2 Stop Time	00:00:00 to 23:59:59	00:00:00	RW	Time				US
09.049	Timer 2 Repeat Function	None (0), Hour (1), Day (2), Week (3), Month (4), Year (5), One off (6), Minute (7)	None (0)	RW	Txt				US
09.050	Timer 2 Enable	Off (0) or On (1)	Off (0)	RW	Bit				US
09.051	Timer 2 Invert	Off (0) or On (1)	Off (0)	RW	Bit				US
09.052	Timer 2 Output	Off (0) or On (1)		RO	Bit	ND	NC	PT	
09.053	Timer 2 Destination	0.000 to 30.999	0.000	RW	Num	DE		PT	US
09.055	Scope Trace 1 Source	0.000 to 30.999	0.000	RW	Num			PT	US
09.056	Scope Trace 2 Source	0.000 to 30.999	0.000	RW	Num			PT	US
09.057	Scope Trace 3 Source	0.000 to 30.999	0.000	RW	Num			PT	US
09.058	Scope Trace 4 Source	0.000 to 30.999	0.000	RW	Num			PT	US
09.059	Scope Trigger	Off (0) or On (1)	Off (0)	RW	Bit				
09.060	Scope Trigger Source	0.000 to 30.999	0.000	RW	Num			PT	US
09.061	Scope Trigger Threshold	-2147483648 to 2147483647	0	RW	Num				US
09.062	Scope Trigger Invert	Off (0) or On (1)	Off (0)	RW	Bit				US
09.063	Scope Mode	Single (0), Normal (1), Auto (2)	Single (0)	RW	Txt				US
09.064	Scope Arm	Off (0) or On (1)	Off (0)	RW	Bit		NC		
09.065	Scope Data Not Ready	Off (0) or On (1)		RO	Bit	ND	NC	PT	

09.066	Scope Saving Data	Off (0) or On (1)		RO	Bit	ND	NC	PT	
09.067	Scope Sample Time	1 to 200	1	RW	Num				US
09.068	Scope Trigger Delay	0 to 100 %	0 %	RW	Num				US
09.069	Scope Time Period	0.00 to 200000.00 ms		RO	Num	ND	NC	PT	
09.070	Scope Auto-save Mode	Disabled (0), Overwrite (1), Keep (2)	Disabled (0)	RW	Txt				US
09.071	Scope Auto-save File Number	0 to 99		RO	Num	ND	NC	PT	PS
09.072	Scope Auto-save Reset	Off (0) or On (1)	Off (0)	RW	Bit				
09.073	Scope Auto-save Status	Disabled (0), Active (1), Stopped (2), Failed (3)		RO	Txt	ND	NC	PT	PS

RW	Read / Write	RO	Read-only	Bit	Bit parameter	Txt	Text string	Date	Date parameter	Time	Time parameter
Chr	Character parameter	Bin	Binary parameter	IP	IP address	Mac	MAC address	Ver	Version number	SMP	Slot, menu, parameter
Num	Number parameter	DE	Destination	ND	No default value	RA	Rating dependent	NC	Non-copyable	PT	Protected
FI	Filtered	US	User save	PS	Power-down save						

Menu 9 − *User Functions 1*

Mode: RFC-A

Menu 9 provides the parameters for the following features:

1. Logic functions
2. Motorised Pot
3. Binary Sum
4. Timers
5. Scope function

Logic functions

The logic functions are always active even if the sources and destinations are not routed to valid parameters. If the sources are not valid parameters then the source values are taken as 0. The update rate for each of the logic functions is always 4ms

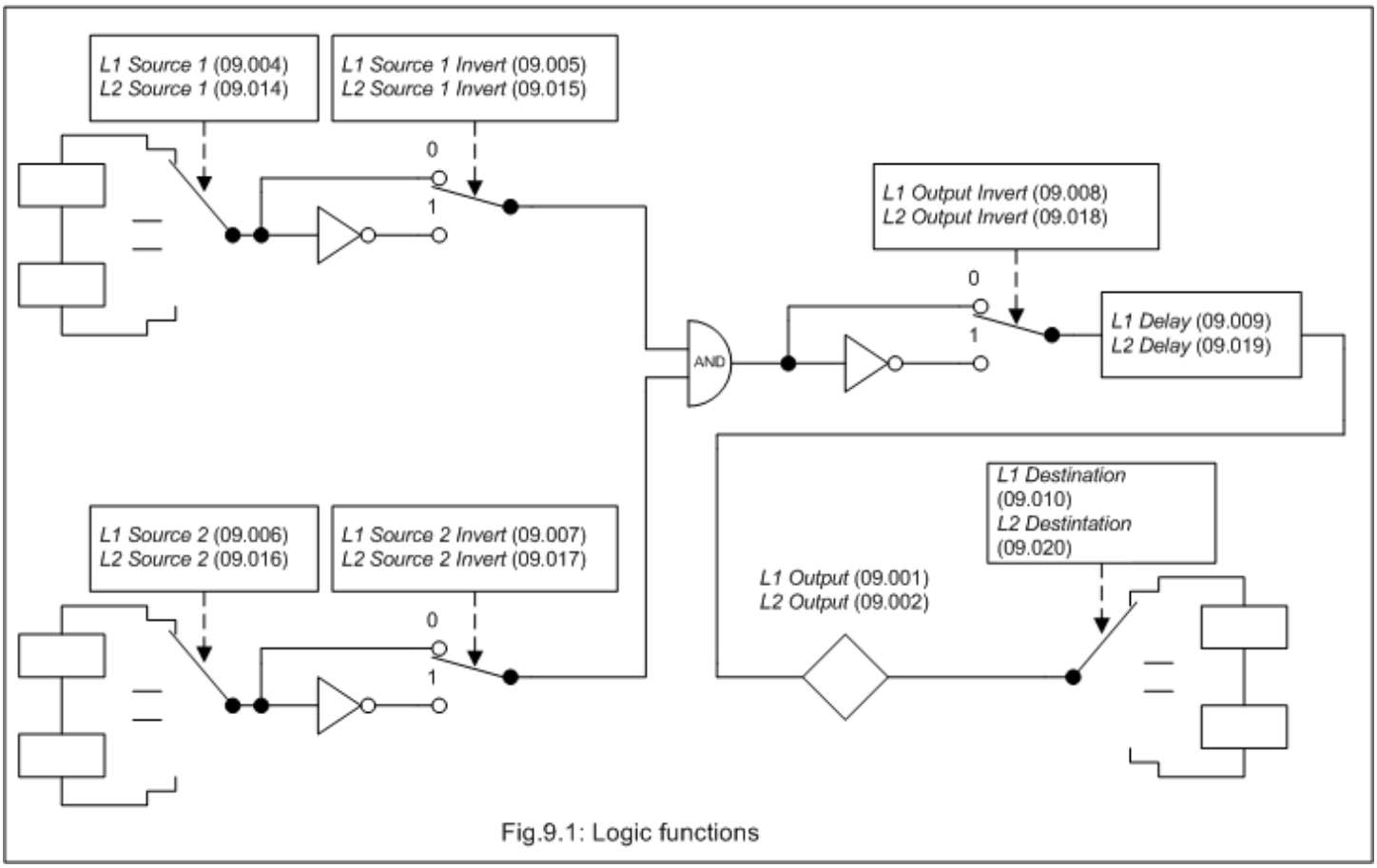

Fig.9.1: Logic functions

The logic function consists of an AND gate with inverters on each input and an inverter on the output. Some of the other standard logic functions can be produced as shown in the table below.

Logic function	Source 1 Invert	Source 2 Invert	Output Invert
AND	0	0	0
NAND	0	0	1
OR	1	1	1
NOR	1	1	0

A delay function is provided at the output of the logic functions. If *Logic Function 1 Delay* (09.009) or *Logic Function 2 Delay* (09.019) is positive then the output does not become 1 until the input to the delay has been at 1 for the delay time. If *Logic Function 1 Delay* (09.009) or *Logic Function 2 Delay* (09.019) is negative then the output remains at 1 until the input to the delay has been 0 for the delay time.

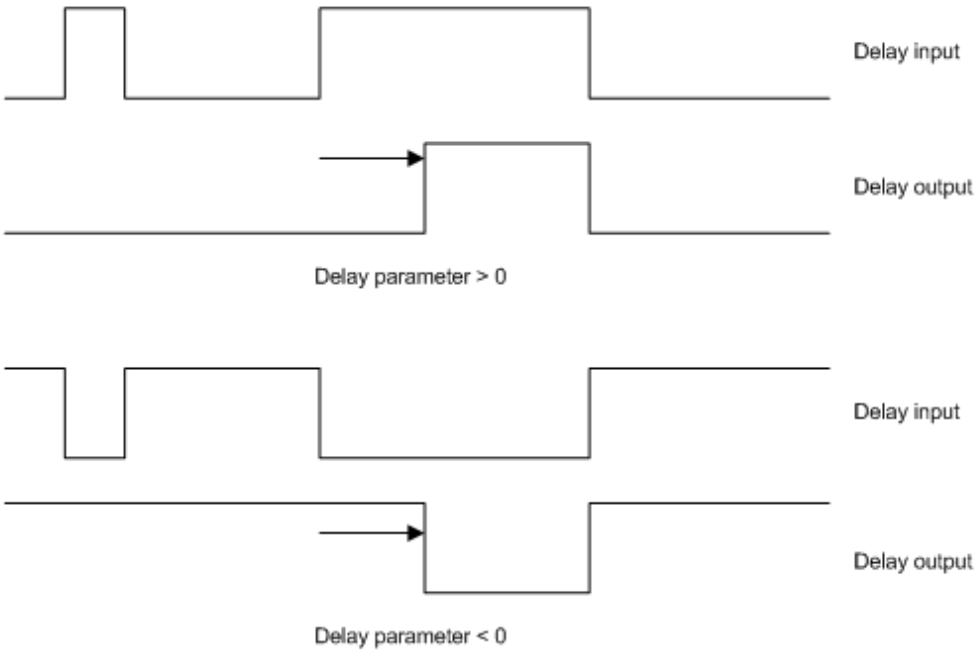

Fig.9.2: Logic function delay

Motorised pot

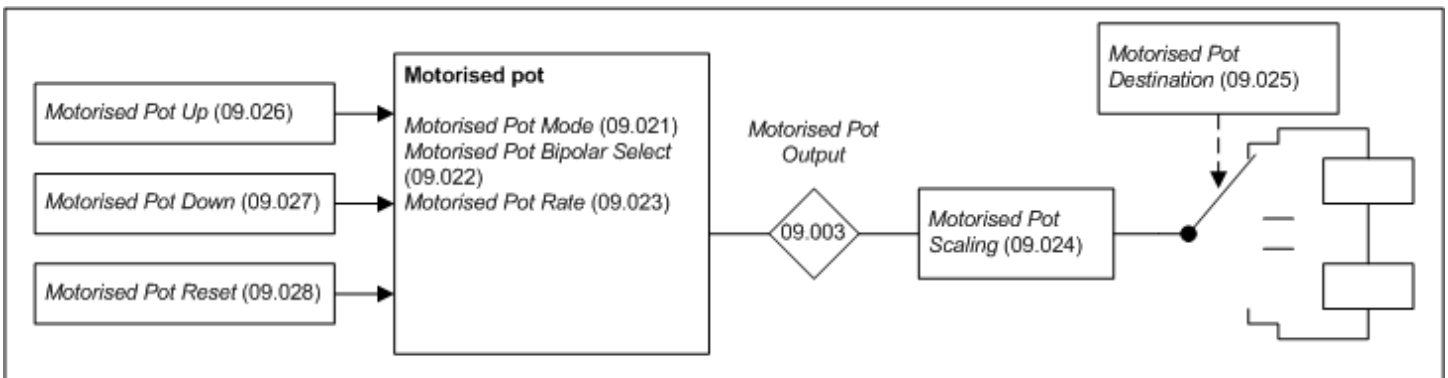

Fig.9.3: Motorised pot

If *Motorised Pot Reset* (09.028) = 1 then the motorised pot is disabled and held in its reset state with *Motorised Pot Output* (09.003) = 0.0%. If *Motorised Pot Reset* (09.028) = 0 the motorised pot is enabled even if *Motorised Pot Destination* (09.025) is not routed to a valid parameter. The sample rate of the motorised pot is always 4ms.

When the motorised pot is active *Motorised Pot Output* (09.003) can be increased or decreased by setting *Motorised Pot Up* (09.026) or *Motorised Pot Down* (09.027) to 1 respectively. If both *Motorised Pot Up* (09.026) and *Motorised Pot Down* (09.027) are 1 then *Motorised Pot Output* (09.003) is increased. The rate of change of *Motorised Pot Output* (09.003) is defined by *Motorised Pot Rate* (09.023) which gives the time to change from 0 to 100%. The time to change from -100% to 100% is *Motorised Pot Rate* (09.023) x 2. If *Motorised Pot Bipolar Select* (09.022) = 0 then *Motorised Pot Output* (09.003) is limited in the range 0.00% to 100.00%, otherwise it is allowed to change in the range from -100.00% to 100.00%.

Motorised Pot Mode (09.021) defines the mode of operation as given in the table below.

***Motorised Pot Mode* (09.021)**	***Motorised Pot Output* (09.003)**	***Motorised Pot Up* (09.026) and *Motorised Pot Down* (09.027) active**
0	Reset to zero at power-up	Always
1	Set to power-down value at power-up	Always
2	Reset to zero at power-up	When *Drive Active* (10.002) = 1
3	Set to power-down value at power-up	When *Drive Active* (10.002) = 1
4	Reset to zero at power-up and when *Drive Active* (10.002) = 0	When *Drive Active* (10.002) = 1

Motorised Pot Scaling (09.024) introduces a scaling factor at the output of the motorised pot before the output is routed to the destination. If *Motorised Pot Scaling* (09.024) *Motorised Pot Scaling* (09.024) > 1.000 the output will exceed the range of the destination parameter, and so the destination parameter will be at its maximum or minimum before the output of the motorised pot reaches the limits of its range.

Binary sum

The binary sum function is always active even if the destination is not routed to valid a parameter. The update rate for the binary sum is always 4ms.

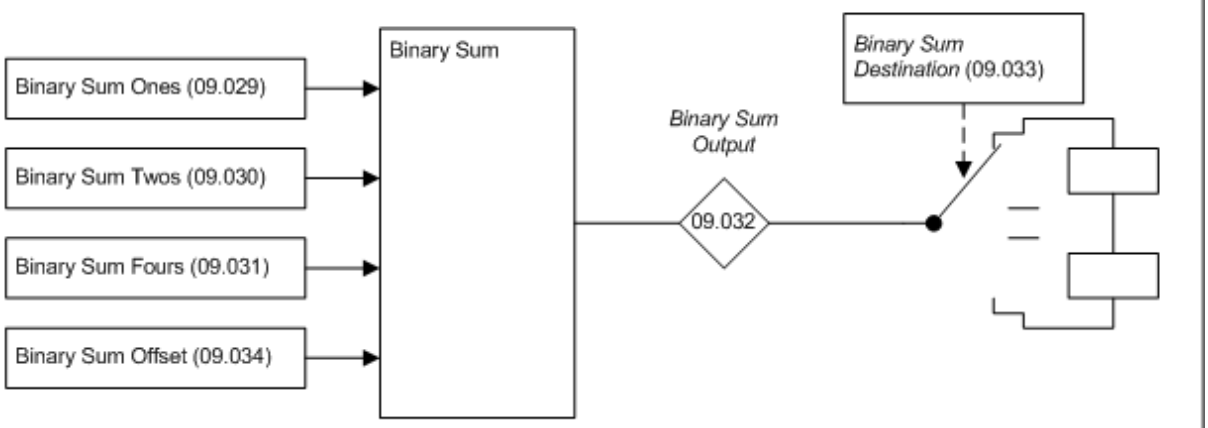

Fig.9.4: Binary sum

The output of the binary sum block is given by

Binary Sum Output (09.032) = *Binary Sum Offset* (09.034) + (*Binary Sum Ones* (09.029) x 1) + (*Binary Sum Twos* (09.030) x 2) + (*Binary Sum Fours* (09.031) x 4)

Binary Sum Destination (09.033) defines the destination for the binary sum output. The routing for this destination is special if the maximum of the destination parameter ≤ 7 + [*Binary Sum Offset* (09.034)] as follows:

Destination parameter = *Binary Sum Output* (09.032), subject to the parameter minimum

Otherwise *Binary Sum Output* (09.032) is routed in the same way as any other destination where the destination target is at its full scale value when the *Binary Sum Output* (09.032) = 7 + Offset.

Timers

If the enable input to a timer is active and the repeat function is set to a non-zero value then the timer is active even if the destination is not routed to valid a parameter. The timers are updated in the background task and have a resolution of 1s.

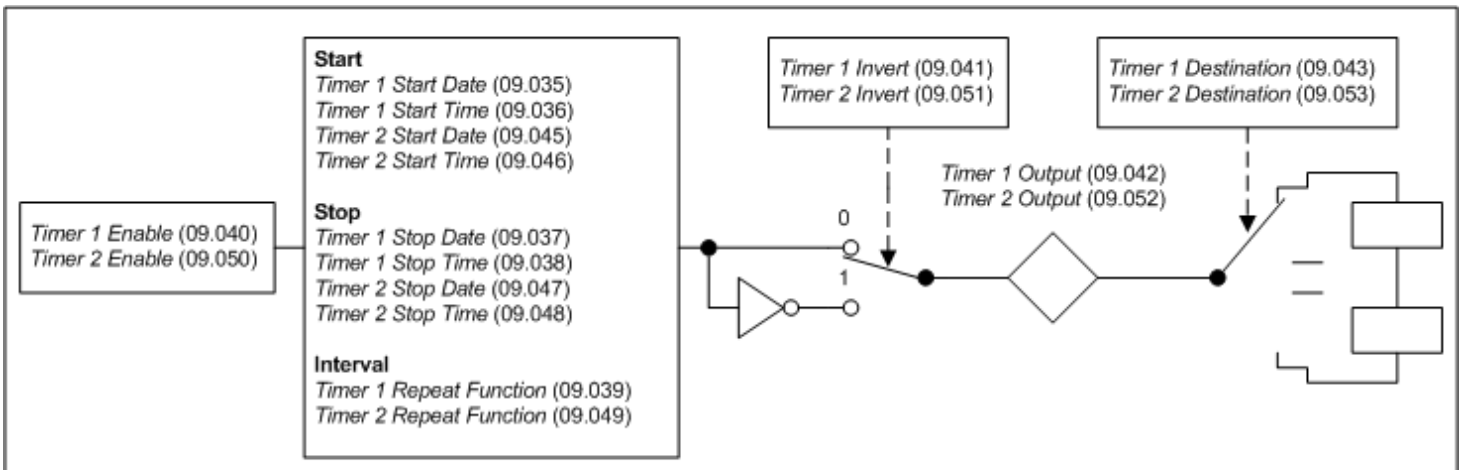

Fig.9.5: Timers

The following is a description of Timer 1, but Timer 2 behaves in the same way. If *Timer 1 Invert* = 0 then *Timer 1 Output* (09.042) is inactive before the *Timer 1 Start Date* (09.035) / *Timer 1 Start Time* (09.036), active between this date/time and *Timer 1 Stop Date* (09.037) / *Timer 1 Stop Time* (09.038) and then inactive after the stop time/date within the timer 1 repeat period as shown in the diagram below.

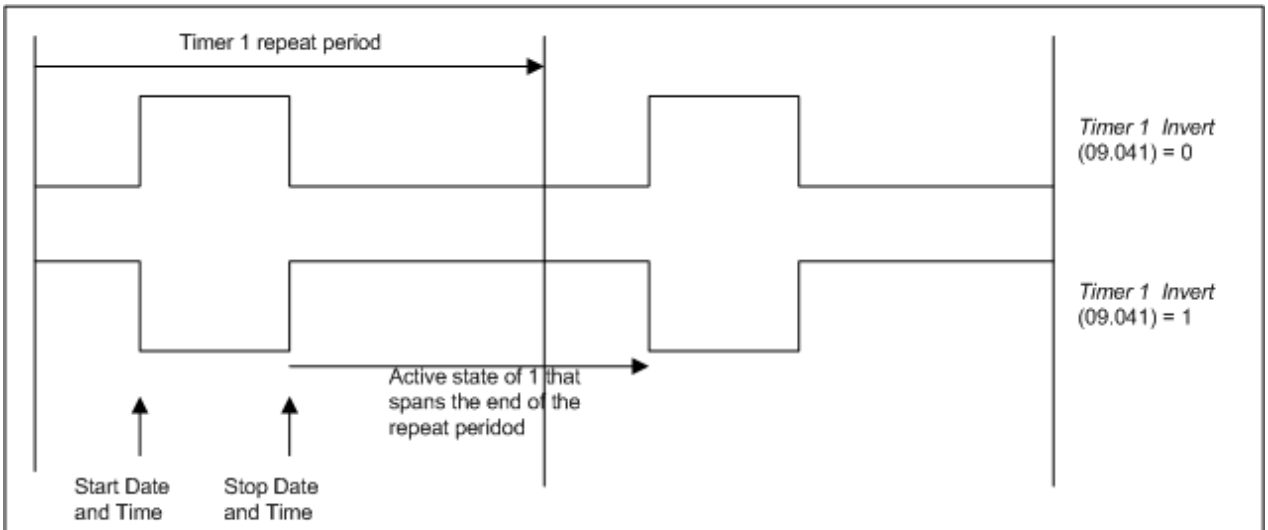

Fig.9.6: Timer 1 output

Timer 1 Repeat Function (09.039) defines the length of the repeat period. For example if *Timer 1 Repeat Function* (09.039) = 2 then the repeat period is one day. The output is inactive until the time reaches the hour, minute and second defined in *Timer 1 Start Time* (09.036), and remains active until the time reaches the hour, minute and second defined in *Timer 1 Stop Time* (09.038). Different repeat periods may be selected as given in the table below. The table shows the constituent parts of the date and time that are used to determine the start and stop events. If the repeat period is set to every week then *Timer 1 Start Date* (09.035) and *Timer 1 Stop Date* (09.037) define the day of the week and not the date (i.e. 00.00.00 = Sunday, 00.00.01 = Monday, etc.). If the stop time event is set to occur at or before the start time event or the *Timer 1 Repeat Function* (09.039) = 0 or *Timer 1 Enable* (09.040) = 0 the output remains inactive at all times (i.e. *Timer 1 Output* (09.042) = 0 if *Timer 1 Invert* = 0).

***Timer 1 Repeat Function* (09.039)**	**Repeat period**	**Second**	**Minute**	**Hour**	**Day**	**Month**	**Year**	**Day of week**
0	None							
1	Hour	•	•					
2	Day	•	•	•				
3	Week	•	•	•				•
4	Month	•	•	•	•			
5	Year	•	•	•	•	•		
6	One off	•	•	•	•	•	•	
7	Minute	•						

As *Timer 1 Invert* inverts the timer output it can be used to give an active state of 0 instead of 1. Alternatively it can be used to give an active state of 1, but for a time period that spans the ends of the repeat period as shown in the example above. It should be noted that if this method is used to allow the active period to span the ends of the repeat period then if the timer is disabled the output of the timer block before the invert becomes 0, and so the final output of the timer after the invert is 1.

If *Date/Time Selector* (06.019) is changed and the drive is reset then the source for the timers will change, therefore *Timer 1 Repeat Function* (09.039) and *Timer 2 Repeat Function* (09.049) are reset to 0 to disable the timers and the date and time entries in the trip log are cleared.

Scope function

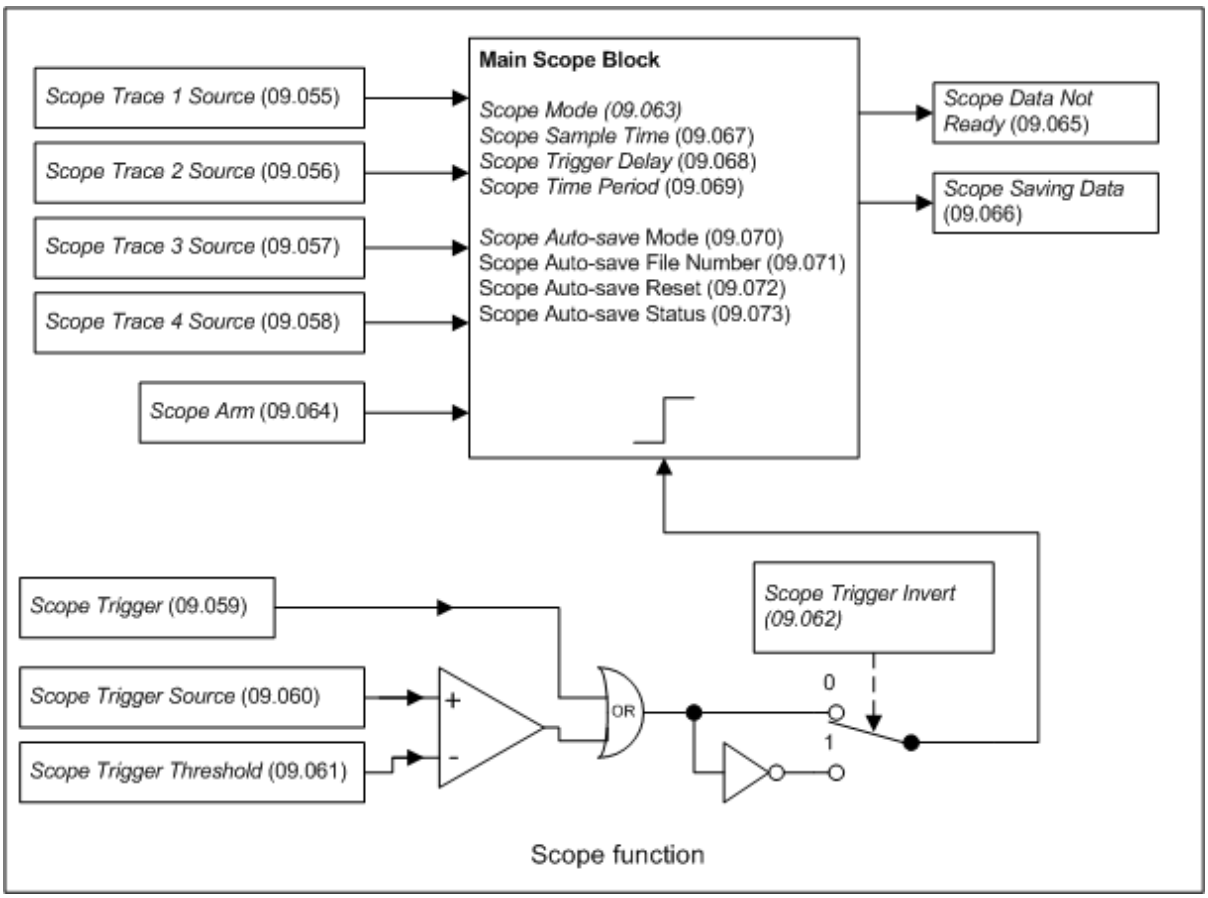

Parameter	09.001 *Logic Function 1 Output*		
Short description	Shows the output state of logic function 1		
Mode	RFC-A		
Minimum	0	Maximum	1
Default		Units	
Type	1 Bit Volatile	Update Rate	4ms write
Display Format	Standard	Decimal Places	0
Coding	RO, ND, NC, PT		

Logic Function 1 Output (09.001) shows the output of logic function 1.

Parameter	09.002 *Logic Function 2 Output*		
Short description	Shows the output state of logic function 2		
Mode	RFC-A		
Minimum	0	Maximum	1
Default		Units	
Type	1 Bit Volatile	Update Rate	4ms write
Display Format	Standard	Decimal Places	0
Coding	RO, ND, NC, PT		

Logic Function 2 Output (09.002) shows the output of logic function 2.

Parameter	09.003 *Motorised Pot Output*		
Short description	Shows the output level of the motorised pot function		
Mode	RFC-A		
Minimum	-100.00	Maximum	100.00
Default		Units	%
Type	16 Bit Power Down Save	Update Rate	4ms write
Display Format	Standard	Decimal Places	2
Coding	RO, ND, NC, PT		

Motorised Pot Output (09.003) shows the output of the motorised pot function.

Parameter	09.004 *Logic Function 1 Source 1*		
Short description	Defines input source 1 of logic function 1		
Mode	RFC-A		
Minimum	0.000	Maximum	30.999
Default	0.000	Units	
Type	16 Bit User Save	Update Rate	Drive reset read
Display Format	Standard	Decimal Places	3
Coding	RW, PT, BU		

Logic Function 1 Source 1 (09.004) defines input souce 1 of logic function 1.

Parameter	09.005 *Logic Function 1 Source 1 Invert*		
Short description	Set to invert input 1 of logic function 1		
Mode	RFC-A		
Minimum	0	Maximum	1
Default	0	Units	
Type	1 Bit User Save	Update Rate	4ms read
Display Format	Standard	Decimal Places	0
Coding	RW		

Setting *Logic Function 1 Source 1 Invert* (09.005) inverts input 1 of logic function 1.

Parameter	09.006 *Logic Function 1 Source 2*		
Short description	Defines input source 2 of logic function 1		
Mode	RFC-A		
Minimum	0.000	Maximum	30.999
Default	0.000	Units	
Type	16 Bit User Save	Update Rate	Drive reset read
Display Format	Standard	Decimal Places	3
Coding	RW, PT, BU		

Logic Function 1 Source 2 (09.006) defines input source 2 of logic function 1.

Parameter	09.007 *Logic Function 1 Source 2 Invert*		
Short description	Set to invert input 2 of logic function 1		
Mode	RFC-A		
Minimum	0	Maximum	1
Default	0	Units	
Type	1 Bit User Save	Update Rate	4ms read
Display Format	Standard	Decimal Places	0
Coding	RW		

Setting *Logic Function 1 Source 2 Invert* (09.007) inverts input 2 of logic function 1.

Parameter	09.008 *Logic Function 1 Output Invert*		
Short description	Set to invert the ouptut of logic function 1		
Mode	RFC-A		
Minimum	0	Maximum	1
Default	0	Units	
Type	1 Bit User Save	Update Rate	4ms read
Display Format	Standard	Decimal Places	0
Coding	RW		

Setting *Logic Function 1 Output Invert* (09.008) inverts the output of logic function 1.

Parameter	09.009 *Logic Function 1 Delay*		
Short description	Defines the output delay of logic function 1		
Mode	RFC-A		
Minimum	-25.0	Maximum	25.0
Default	0.0	Units	s
Type	16 Bit User Save	Update Rate	4ms read
Display Format	Standard	Decimal Places	1
Coding	RW		

Logic Function 1 Delay (09.009) defines the delay at the output of logic function 1. If *Logic Function 1 Delay* (09.009) is positive then the output does not become 1 until the input to the delay has been at 1 for the delay time. If *Logic Function 1 Delay* (09.009) is negative then the output remains at 1 until the input to the delay has been 0 for the delay time.

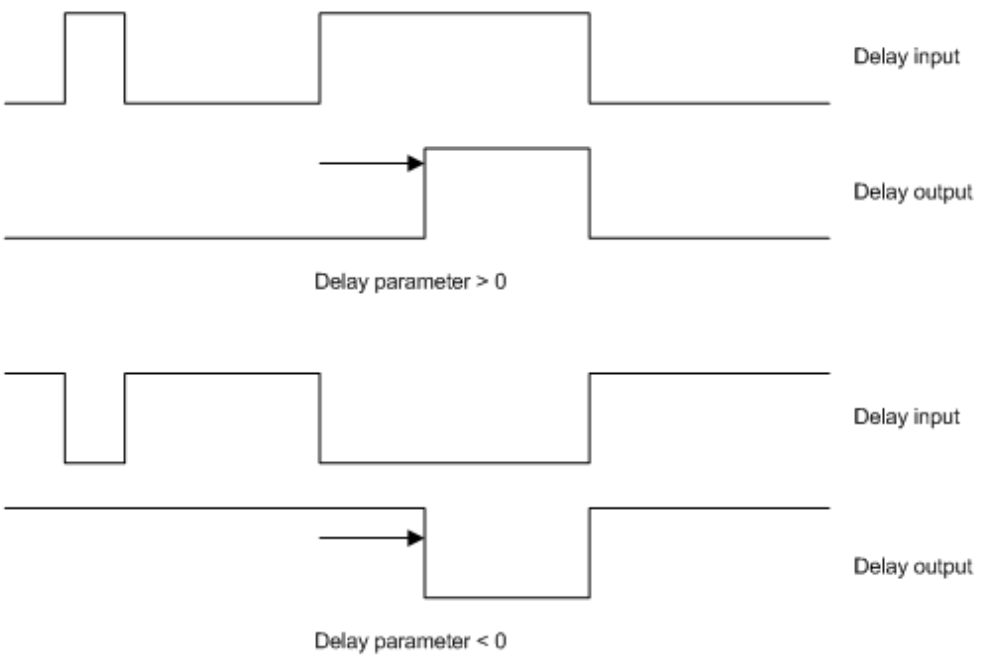

Fig.9.2: Logic function delay

Parameter	09.010 *Logic Function 1 Destination*		
Short description	Defines the output destination of logic function 1		
Mode	RFC-A		
Minimum	0.000	Maximum	30.999
Default	0.000	Units	
Type	16 Bit User Save	Update Rate	Drive reset read
Display Format	Standard	Decimal Places	3
Coding	RW, DE, PT, BU		

Logic Function 1 Destination (09.010) defines the output destination of logic function 1.

Parameter	09.014 *Logic Function 2 Source 1*		
Short description	Defines input source 1 of logic function 2		
Mode	RFC-A		
Minimum	0.000	Maximum	30.999
Default	0.000	Units	
Type	16 Bit User Save	Update Rate	Drive reset read
Display Format	Standard	Decimal Places	3
Coding	RW, PT, BU		

Logic Function 2 Source 1 (09.014) defines input source 1 of logic function 2.

Parameter	09.015 *Logic Function 2 Source 1 Invert*		
Short description	Set to invert input 1 of logic function 2		
Mode	RFC-A		
Minimum	0	Maximum	1
Default	0	Units	
Type	1 Bit User Save	Update Rate	4ms read
Display Format	Standard	Decimal Places	0
Coding	RW		

Setting *Logic Function 2 Source 1 Invert* (09.015) inverts input 1 of logic function 2.

Parameter	09.016 *Logic Function 2 Source 2*		
Short description	Defines input source 2 of logic function 2		
Mode	RFC-A		
Minimum	0.000	Maximum	30.999
Default	0.000	Units	
Type	16 Bit User Save	Update Rate	Drive reset read
Display Format	Standard	Decimal Places	3
Coding	RW, PT, BU		

Logic Function 2 Source 2 (09.016) defines input source 2 of logic function 2.

Parameter	**09.017** ***Logic Function 2 Source 2 Invert***		
Short description	Set to invert input 2 of logic function 2		
Mode	RFC-A		
Minimum	0	Maximum	1
Default	0	Units	
Type	1 Bit User Save	Update Rate	4ms read
Display Format	Standard	Decimal Places	0
Coding	RW		

Setting *Logic Function 2 Source 2 Invert* (09.017) inverts input 2 of logic function 2.

Parameter	**09.018** ***Logic Function 2 Output Invert***		
Short description	Set to invert the ouptut of logic function 2		
Mode	RFC-A		
Minimum	0	Maximum	1
Default	0	Units	
Type	1 Bit User Save	Update Rate	4ms read
Display Format	Standard	Decimal Places	0
Coding	RW		

Setting *Logic Function 2 Output Invert* (09.018) inverts the output of logic function 2.

Parameter	**09.019** ***Logic Function 2 Delay***		
Short description	Defines the output delay of logic function 2		
Mode	RFC-A		
Minimum	-25.0	Maximum	25.0
Default	0.0	Units	s
Type	16 Bit User Save	Update Rate	4ms read
Display Format	Standard	Decimal Places	1
Coding	RW		

Logic Function 2 Delay (09.019) defines the delay at the output of logic function 1. If *Logic Function 2 Delay* (09.019) is positive then the output does not become 1 until the input to the delay has been at 1 for the delay time. If *Logic Function 2 Delay* (09.019) is negative then the output remains at 1 until the input to the delay has been 0 for the delay time.

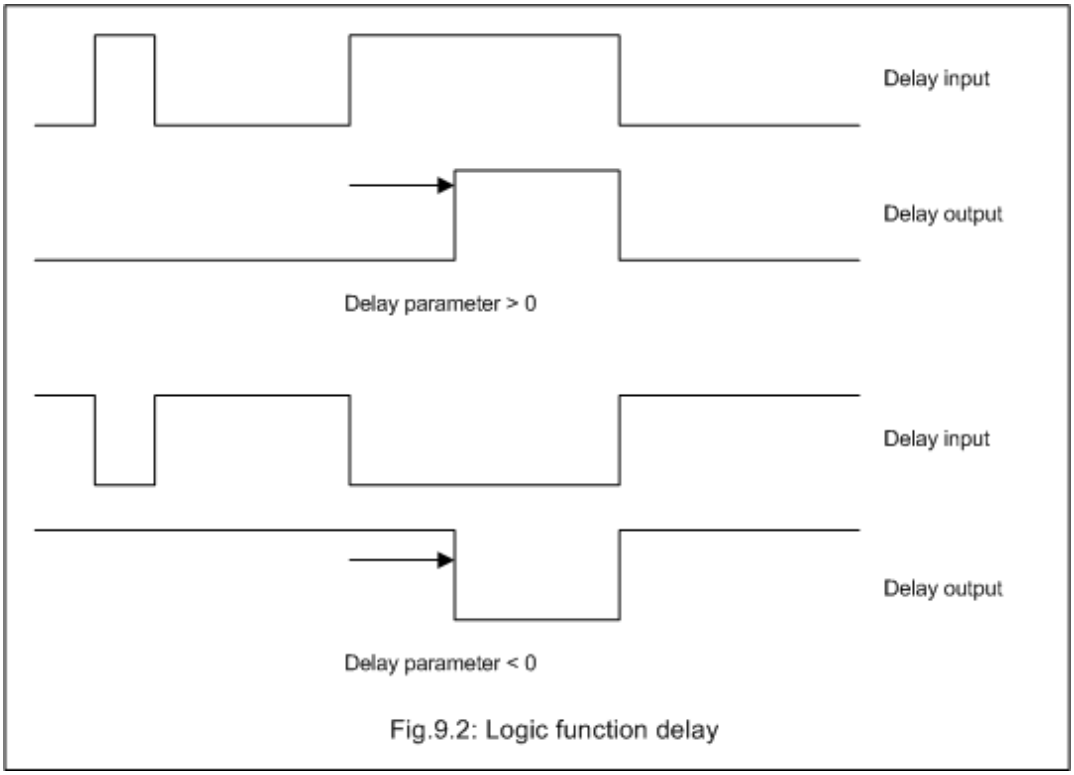

Fig.9.2: Logic function delay

Parameter	09.020 *Logic Function 2 Destination*		
Short description	Defines the output destination of logic function 2		
Mode	RFC-A		
Minimum	0.000	Maximum	30.999
Default	0.000	Units	
Type	16 Bit User Save	Update Rate	Drive reset read
Display Format	Standard	Decimal Places	3
Coding	RW, DE, PT, BU		

Logic Function 2 Destination (09.020) defines the output destination of logic function 2.

Parameter	09.021 *Motorised Pot Mode*		
Short description	Defines the motorised pot mode		
Mode	RFC-A		
Minimum	0	Maximum	4
Default	0	Units	
Type	8 Bit User Save	Update Rate	Background read
Display Format	Standard	Decimal Places	0
Coding	RW		

Motorised Pot Mode (09.021) defines the mode of operation as given in the table below.

***Motorised Pot Mode* (09.021)**	***Motorised Pot Output* (09.003)**	***Motorised Pot Up* (09.026) and *Motorised Pot Down* (09.027) active**
0	Reset to zero at power-up	Always
1	Set to power-down value at power-up	Always
2	Reset to zero at power-up	When *Drive Active* (10.002) = 1
3	Set to power-down value at power-up	When *Drive Active* (10.002) = 1
4	Reset to zero at power-up and when *Drive Active* (10.002) = 0	When *Drive Active* (10.002) = 1

Parameter	09.022 *Motorised Pot Bipolar Select*		
Short description	Set to enable bipolar operation of the motorised pot		
Mode	RFC-A		
Minimum	0	Maximum	1
Default	0	Units	
Type	1 Bit User Save	Update Rate	4ms read
Display Format	Standard	Decimal Places	0
Coding	RW		

If *Motorised Pot Bipolar Select* (09.022) = 0 then *Motorised Pot Output* (09.003) is limited in the range 0.00% to 100.00%, otherwise it is allowed to change in the range from -100.00% to 100.00%.

Parameter	09.023 *Motorised Pot Rate*		
Short description	Defines the rate of change of the motorised pot output		
Mode	RFC-A		
Minimum	0	Maximum	250
Default	20	Units	s
Type	8 Bit User Save	Update Rate	Background
Display Format	Standard	Decimal Places	0
Coding	RW, BU		

The rate of change of *Motorised Pot Output* (09.003) is defined by *Motorised Pot Rate* (09.023) which gives the time to change from 0 to 100%. The time to change from -100% to 100% is *Motorised Pot Rate* (09.023) x 2.

Parameter	09.024 *Motorised Pot Scaling*		
Short description	Defines the scaling applied to the motorised pot output		
Mode	RFC-A		
Minimum	0.000	Maximum	4.000
Default	1.000	Units	
Type	16 Bit User Save	Update Rate	4ms read
Display Format	Standard	Decimal Places	3
Coding	RW		

Motorised Pot Scaling (09.024) introduces a scaling factor at the output of the motorised pot before the output is routed to the destination. If *Motorised Pot Scaling* (09.024) > 1.000 the output will exceed the range of the destination parameter, and so the destination parameter will be at its maximum or minimum before the output of the motorised pot reaches the limits of its range.

Parameter	09.025 *Motorised Pot Destination*		
Short description	Defines the output destination of the motorised pot		
Mode	RFC-A		
Minimum	0.000	Maximum	30.999
Default	0.000	Units	
Type	16 Bit User Save	Update Rate	Drive reset read
Display Format	Standard	Decimal Places	3
Coding	RW, DE, PT, BU		

Motorised Pot Destination (09.025) defines the output destination of the motorised pot function.

Parameter	09.026 *Motorised Pot Up*		
Short description	Set to increase the motorised pot output		
Mode	RFC-A		
Minimum	0	Maximum	1
Default	0	Units	
Type	1 Bit Volatile	Update Rate	4ms read
Display Format	Standard	Decimal Places	0
Coding	RW, NC		

If *Motorised Pot Up* (09.026) = 1, then the *Motorised Pot Output* (09.003) will increase.

Parameter	09.027 *Motorised Pot Down*		
Short description	Set to decrese the motorised pot output		
Mode	RFC-A		
Minimum	0	Maximum	1
Default	0	Units	
Type	1 Bit Volatile	Update Rate	4ms read
Display Format	Standard	Decimal Places	0
Coding	RW, NC		

If *Motorised Pot Down* (09.027) = 1 and *Motorised Pot Up* (09.026) = 0 , then the *Motorised Pot Output* (09.003) will decrease.

Parameter	09.028 *Motorised Pot Reset*		
Short description	Set to reset the motorised pot output to zero		
Mode	RFC-A		
Minimum	0	Maximum	1
Default	0	Units	
Type	1 Bit Volatile	Update Rate	4ms read
Display Format	Standard	Decimal Places	0
Coding	RW, NC		

If *Motorised Pot Reset* (09.028) = 1 then the motorised pot is disabled and held in its reset state with *Motorised Pot Output* (09.003) = 0.0%.
If *Motorised Pot Reset* (09.028) the motorised pot is enabled even if *Motorised Pot Destination* (09.025) is not routed to a valid parameter.

Parameter	09.029 *Binary Sum Ones*		
Short description	Set to add one to the binary sum output		
Mode	RFC-A		
Minimum	0	Maximum	1
Default	0	Units	
Type	1 Bit Volatile	Update Rate	4ms read
Display Format	Standard	Decimal Places	0
Coding	RW		

See *Binary Sum Output* (09.032).

Parameter	09.030 *Binary Sum Twos*		
Short description	Set to add two to the binary sum output		
Mode	RFC-A		
Minimum	0	Maximum	1
Default	0	Units	
Type	1 Bit Volatile	Update Rate	4ms read
Display Format	Standard	Decimal Places	0
Coding	RW		

See *Binary Sum Output* (09.032).

Parameter	09.031 *Binary Sum Fours*		
Short description	Set to add three to the binary sum output		
Mode	RFC-A		
Minimum	0	Maximum	1
Default	0	Units	
Type	1 Bit Volatile	Update Rate	4ms read
Display Format	Standard	Decimal Places	0
Coding	RW		

See *Binary Sum Output* (09.032).

Parameter	09.032 *Binary Sum Output*		
Short description	Shows the output level of the binary sum		
Mode	RFC-A		
Minimum	0	Maximum	255
Default		Units	
Type	8 Bit Volatile	Update Rate	4ms write
Display Format	Standard	Decimal Places	0
Coding	RO, ND, NC, PT, BU		

The binary sum function is always active even if the destination is not routed to valid a parameter. The update rate for the binary sum is always 4ms.

The output of the binary sum block is given by

Binary Sum Output (09.032) = *Binary Sum Offset* (09.034) + (*Binary Sum Ones* (09.029) x 1) + (*Binary Sum Twos* (09.030) x 2) + (*Binary Sum Fours* (09.031) x 4)

Binary Sum Destination (09.033) defines the destination for the binary sum output. The routing for this destination is special if the maximum of the destination parameter ≤ 7 + [*Binary Sum Offset* (09.034)] as follows:

Destination parameter = *Binary Sum Output* (09.032), subject to the parameter minimum

Otherwise *Binary Sum Output* (09.032) is routed in the same way as any other destination where the destination target is at its full scale value when the *Binary Sum Output* (09.032) = 7 + *Binary Sum Offset* (09.034)

Example:

09.033 = 01.015

09.029 = 0

09.030 = 1

09.031 = 0

09.034 = 0

So 09.032 = 2

And 01.015 = (01.015[MAX] x 09.032) / (7 + 09.034)

01.015 = (9 x 2)/(7+0) = 2.57 = 3 (rounded to nearest integer)

If 09.034 = 1 then 01.015 = (9 x 3)/(7+1) = 3.37 = 3 (rounded to nearest integer)

If 09.034 = 2 then 01.015 = (9 x 4)/(7+2) = 4

Parameter	09.033 *Binary Sum Destination*		
Short description	Defines the output destination of the binary sum		
Mode	RFC-A		
Minimum	0.000	Maximum	30.999
Default	0.000	Units	
Type	16 Bit User Save	Update Rate	Drive reset read
Display Format	Standard	Decimal Places	3
Coding	RW, DE, PT, BU		

Binary Sum Destination (09.033) defines the destination for the binary sum output.

See *Binary Sum Output* (09.032) for more information.

Parameter	09.034 *Binary Sum Offset*		
Short description	Defines the offset added to the output of the binary sum		
Mode	RFC-A		
Minimum	0	Maximum	248
Default	0	Units	
Type	8 Bit User Save	Update Rate	4ms read
Display Format	Standard	Decimal Places	0
Coding	RW, BU		

See *Binary Sum Output* (09.032).

Parameter	09.035 *Timer 1 Start Date*		
Short description	Defines the start date for timer 1		
Mode	RFC-A		
Minimum	0 (Display: 00-00-00)	Maximum	311299 (Display: 31-12-99)
Default	0 (Display: 00-00-00)	Units	
Type	32 Bit User Save	Update Rate	Background read
Display Format	Date	Decimal Places	0
Coding	RW		

Timer 1 Start Date (09.035) defines the start date within the repeat period of timer 1.

See *Timer 1 Repeat Function* (09.039) for more information.

Parameter	09.036 *Timer 1 Start Time*		
Short description	Defines the start time for timer 1		
Mode	RFC-A		
Minimum	0 (Display: 00:00:00)	Maximum	235959 (Display: 23:59:59)
Default	0 (Display: 00:00:00)	Units	
Type	32 Bit User Save	Update Rate	Background read
Display Format	Time	Decimal Places	0
Coding	RW		

Timer 1 Start Time (09.036) defines the start time within the repeat period of timer 1.

See *Timer 1 Repeat Function* (09.039) for more information.

Parameter	09.037 *Timer 1 Stop Date*		
Short description	Defines the stop date for timer 1		
Mode	RFC-A		
Minimum	0 (Display: 00-00-00)	Maximum	311299 (Display: 31-12-99)
Default	0 (Display: 00-00-00)	Units	
Type	32 Bit User Save	Update Rate	Background read
Display Format	Date	Decimal Places	0
Coding	RW		

Timer 1 Stop Date (09.037) defines the stop date within the repeat period of timer 1.

See *Timer 1 Repeat Function* (09.039) for more information.

Parameter	09.038 *Timer 1 Stop Time*		
Short description	Defines the stop time for timer 1		
Mode	RFC-A		
Minimum	0 (Display: 00:00:00)	Maximum	235959 (Display: 23:59:59)
Default	0 (Display: 00:00:00)	Units	
Type	32 Bit User Save	Update Rate	Background read
Display Format	Time	Decimal Places	0
Coding	RW		

Timer 1 Stop Time (09.038) defines the stop time within the repeat period of timer 1.

See *Timer 1 Repeat Function* (09.039) for more information.

Parameter	09.039 *Timer 1 Repeat Function*		
Short description	Defines the length of the repeat period		
Mode	RFC-A		
Minimum	0	Maximum	7
Default	0	Units	
Type	8 Bit User Save	Update Rate	Background read
Display Format	Standard	Decimal Places	0
Coding	RW, TE		

Value	*Text*
0	None
1	Hour
2	Day
3	Week
4	Month
5	Year
6	One off
7	Minute

Timer 1 Repeat Function (09.039) defines the length of the repeat period. For example if *Timer 1 Repeat Function* (09.039) = 2 then the repeat period is one day. The output is inactive until the time reaches the hour, minute and second defined in *Timer 1 Start Time* (09.036), and remains active until the time reaches the hour, minute and second defined in *Timer 1 Stop Time* (09.038). Different repeat periods may be selected as given in the table below. The table shows the constituent parts of the date and time that are used to determine the start and stop events. If the repeat period is set to every week then *Timer 1 Start Date* (09.035) and *Timer 1 Stop Date* (09.037) define the day of the week and not the date (i.e. 00.00.00 = Sunday, 00.00.01 = Monday, etc.). If the stop time event is set to occur at or before the start time event or the *Timer 1 Repeat Function* (09.039) = 0 or *Timer 1 Enable* (09.040) = 0 the output remains inactive at all times (i.e. *Timer 1 Output* (09.042) = 0 if *Timer 1 Invert* = 0).

Timer 1 Repeat Function (09.039)	Repeat period	Second	Minute	Hour	Day	Month	Year	Day of week
0	None							
1	Hour	•	•					
2	Day	•	•	•				
3	Week	•	•	•				•
4	Month	•	•	•	•			
5	Year	•	•	•	•	•		
6	One off	•	•	•	•	•	•	
7	Minute	•						

Parameter	09.040 *Timer 1 Enable*		
Short description	Set to enable the timer 1 function		
Mode	RFC-A		
Minimum	0	Maximum	1
Default	0	Units	
Type	1 Bit User Save	Update Rate	Background read
Display Format	Standard	Decimal Places	0
Coding	RW		

Timer 1 Enable (09.040) enables the timer 1 function. If *Timer 1 Enable* (09.040) = 0, then the output of the timer is always inactive, i.e. *Timer 1 Output* (09.042) =0.

Parameter	09.041 *Timer 1 Invert*		
Short description	Set to invert the output of timer 1		
Mode	RFC-A		
Minimum	0	Maximum	1
Default	0	Units	
Type	1 Bit User Save	Update Rate	Background read
Display Format	Standard	Decimal Places	0
Coding	RW		

Timer 1 Invert (09.041) inverts the timer output to give an active state of 0 instead of 1. Alternatively it can be used to give an active state of 1, but for a

time period that spans the ends of the repeat period as shown in the example above. It should be noted that if this method is used to allow the active period to span the ends of the repeat period then if the timer is disabled the output of the timer block before the invert becomes 0, and so the final output of the timer after the invert is 1.

See *User Functions 1* for more information.

Parameter	**09.042 *Timer 1 Output***		
Short description	Shows the output state of timer function 1		
Mode	RFC-A		
Minimum	0	Maximum	1
Default		Units	
Type	1 Bit Volatile	Update Rate	Background write
Display Format	Standard	Decimal Places	0
Coding	RO, ND, NC, PT		

Timer 1 Output (09.042) shows the output of the timer function 1.

Parameter	**09.043 *Timer 1 Destination***		
Short description	Defines the output destination of timer function 1		
Mode	RFC-A		
Minimum	0.000	Maximum	30.999
Default	0.000	Units	
Type	16 Bit User Save	Update Rate	Drive reset read
Display Format	Standard	Decimal Places	3
Coding	RW, DE, PT, BU		

Timer 1 Destination (09.043) defines the output destination of timer function 1.

Parameter	**09.045 *Timer 2 Start Date***		
Short description	Defines the start date for timer 2		
Mode	RFC-A		
Minimum	0 (Display: 00-00-00)	Maximum	311299 (Display: 31-12-99)
Default	0 (Display: 00-00-00)	Units	
Type	32 Bit User Save	Update Rate	Background read
Display Format	Date	Decimal Places	0
Coding	RW		

Timer 2 Start Date (09.045) defines the start date within the repeat period of timer 2.

See *Timer 1 Repeat Function* (09.039) for more information.

Parameter	**09.046 *Timer 2 Start Time***		
Short description	Defines the start time for timer 2		
Mode	RFC-A		
Minimum	0 (Display: 00:00:00)	Maximum	235959 (Display: 23:59:59)
Default	0 (Display: 00:00:00)	Units	
Type	32 Bit User Save	Update Rate	Background read
Display Format	Time	Decimal Places	0
Coding	RW		

Timer 2 Start Time (09.046) defines the start time within the repeat period of timer 2.

See *Timer 1 Repeat Function* (09.039) for more information.

Parameter	**09.047 *Timer 2 Stop Date***		
Short description			
Mode	RFC-A		
Minimum	0 (Display: 00-00-00)	Maximum	311299 (Display: 31-12-99)
Default	0 (Display: 00-00-00)	Units	
Type	32 Bit User Save	Update Rate	Background read
Display Format	Date	Decimal Places	0
Coding	RW		

Timer 2 Stop Date (09.047) defines the stop date within the repeat period of timer 2.

See *Timer 1 Repeat Function* (09.039) for more information.

Parameter	09.048 *Timer 2 Stop Time*		
Short description	Defines the stop time for timer 2		
Mode	RFC-A		
Minimum	0 (Display: 00:00:00)	Maximum	235959 (Display: 23:59:59)
Default	0 (Display: 00:00:00)	Units	
Type	32 Bit User Save	Update Rate	Background read
Display Format	Time	Decimal Places	0
Coding	RW		

Timer 2 Stop Time (09.048) defines the stop time within the repeat period of timer 2.

See *Timer 1 Repeat Function* (09.039) for more information.

Parameter	09.049 *Timer 2 Repeat Function*		
Short description	Defines the length of the repeat period		
Mode	RFC-A		
Minimum	0	Maximum	7
Default	0	Units	
Type	8 Bit User Save	Update Rate	Background read
Display Format	Standard	Decimal Places	0
Coding	RW, TE		

Value	*Text*
0	None
1	Hour
2	Day
3	Week
4	Month
5	Year
6	One off
7	Minute

See *Timer 1 Repeat Function* (09.039).

Parameter	09.050 *Timer 2 Enable*		
Short description	Set to enable the timer 2 function		
Mode	RFC-A		
Minimum	0	Maximum	1
Default	0	Units	
Type	1 Bit User Save	Update Rate	Background read
Display Format	Standard	Decimal Places	0
Coding	RW		

Timer 2 Enable (09.050) enables the timer 2 function. If *Timer 2 Enable* (09.050) = 0, then the output of the timer is always inactive, i.e. *Timer 2 Output* (09.052) = 0.

Parameter	09.051 *Timer 2 Invert*		
Short description	Set to invert the output of timer 2		
Mode	RFC-A		
Minimum	0	Maximum	1
Default	0	Units	
Type	1 Bit User Save	Update Rate	Background read
Display Format	Standard	Decimal Places	0
Coding	RW		

Timer 2 Invert (09.051) inverts the timer output to give an active state of 0 instead of 1.

See *Timer 1 Invert* (09.041) for more information.

Parameter	09.052 *Timer 2 Output*		
Short description	Shows the output state of timer function 2		
Mode	RFC-A		
Minimum	0	Maximum	1
Default		Units	
Type	1 Bit Volatile	Update Rate	Background write
Display Format	Standard	Decimal Places	0
Coding	RO, ND, NC, PT		

Timer 2 Output (09.052) shows the output of timer function 2.

Parameter	09.053 *Timer 2 Destination*		
Short description	Defines the output destination of timer function 2		
Mode	RFC-A		
Minimum	0.000	Maximum	30.999
Default	0.000	Units	
Type	16 Bit User Save	Update Rate	Drive reset read
Display Format	Standard	Decimal Places	3
Coding	RW, DE, PT, BU		

Timer 2 Destination (09.053) defines the output destination of timer function 2.

Parameter	09.055 *Scope Trace 1 Source*		
Short description	Defines the source of scope trace 1		
Mode	RFC-A		
Minimum	0.000	Maximum	30.999
Default	0.000	Units	
Type	16 Bit User Save	Update Rate	Drive reset read
Display Format	Standard	Decimal Places	3
Coding	RW, PT, BU		

Up to four scope sources can be selected using *Scope Trace 1 Source* (09.055) to *Scope Trace 4 Source* (09.058). If the source value is set to 0.000, or the source parameter does not exist, then no source is selected. The sources do not operate in the same way as normal source parameters in that the input to the scope is the actual value of the parameter and not a value scaled to a percentage based on the range of the parameter. If a scope trace source parameter is modified the actual change is not effective until the drive is reset.

Parameter	09.056 *Scope Trace 2 Source*		
Short description	Defines the source of scope trace 2		
Mode	RFC-A		
Minimum	0.000	Maximum	30.999
Default	0.000	Units	
Type	16 Bit User Save	Update Rate	Drive reset read
Display Format	Standard	Decimal Places	3
Coding	RW, PT, BU		

See *Scope Trace 1 Source* (09.055).

Parameter	09.057 *Scope Trace 3 Source*		
Short description	Defines the source of scope trace 3		
Mode	RFC-A		
Minimum	0.000	Maximum	30.999
Default	0.000	Units	
Type	16 Bit User Save	Update Rate	Drive reset read
Display Format	Standard	Decimal Places	3
Coding	RW, PT, BU		

See *Scope Trace 1 Source* (09.055).

Parameter	09.058 *Scope Trace 4 Source*		
Short description	Defines the source of scope trace 3		
Mode	RFC-A		
Minimum	0.000	Maximum	30.999
Default	0.000	Units	
Type	16 Bit User Save	Update Rate	Drive reset read
Display Format	Standard	Decimal Places	3
Coding	RW, PT, BU		

See *Scope Trace 1 Source* (09.055).

Parameter	09.059 *Scope Trigger*		
Short description	Set to trigger the scope function		
Mode	RFC-A		
Minimum	0	Maximum	1
Default	0	Units	
Type	1 Bit Volatile	Update Rate	250µs read
Display Format	Standard	Decimal Places	0
Coding	RW		

The scope is triggered by a rising edge at the input to the main scope block. If *Scope Trigger Source* (09.060) is set at its default value of 0.000 then the

output of the trigger threshold comparator is 0, and so the scope can be triggered with *Scope Trigger* (09.059). *Scope Trigger Invert* (09.062) can be used to invert the trigger signal.

Parameter	**09.060** ***Scope Trigger Source***		
Short description	Defines the source of the scope trigger		
Mode	RFC-A		
Minimum	0.000	Maximum	30.999
Default	0.000	Units	
Type	16 Bit User Save	Update Rate	Background read
Display Format	Standard	Decimal Places	3
Coding	RW, PT, BU		

If *Scope Trigger* (09.059) = 0, the scope can be triggered based on the level of a parameter defined by *Scope Trigger Source* (09.060) and the *Scope Trigger Threshold* (09.061). This source operates in the same way as the trace sources and a direct comparison is made between the actual parameter value and the threshold. Decimal places are ignored. The threshold detector output is 1 when the value from the scope trigger source is greater than *Scope Trigger Threshold* (09.061). If *Scope Trigger Source* (09.060) = 0.000, or it is used to select a parameter that does not exist, then the output of the threshold detector is 0.

Parameter	**09.061** ***Scope Trigger Threshold***		
Short description	Defines the scope trigger threshold		
Mode	RFC-A		
Minimum	-2147483648	Maximum	2147483647
Default	0	Units	
Type	32 Bit User Save	Update Rate	Background read
Display Format	Standard	Decimal Places	0
Coding	RW		

See *Scope Trigger Source* (09.060).

Parameter	**09.062** ***Scope Trigger Invert***		
Short description	Set to invert the scope trigger		
Mode	RFC-A		
Minimum	0	Maximum	1
Default	0	Units	
Type	1 Bit User Save	Update Rate	Background read
Display Format	Standard	Decimal Places	0
Coding	RW		

See *Scope Trigger* (09.059).

Parameter	**09.063** ***Scope Mode***		
Short description	Defines the mode of the scope		
Mode	RFC-A		
Minimum	0	Maximum	2
Default	0	Units	
Type	8 Bit User Save	Update Rate	Background read
Display Format	Standard	Decimal Places	0
Coding	RW, TE		

Value	***Text***
0	Single
1	Normal
2	Auto

Single (0):
If *Scope Arm* (09.064) is set to 1 the scope starts to acquire pre-trigger data (i.e. enough data to provide information for the pre-trigger period) and *Scope Data Not Ready* (09.065) is set to 1. The scope can then be triggered on the next trigger event (i.e. a rising edge on the trigger input of the main scope block). Note that the scope can only be triggered once the required amount of pre-trigger data has been sampled. Failure to do this will result in the scope function not triggering correctly. When the trigger event occurs *Scope Arm* (09.064) is set to 0, and when the post-trigger data has been stored *Scope Data Not Ready* (09.065) is set to 0. If *Scope Auto-save Mode* (09.070) is non-zero, the data in the scope trace buffer is saved to a non-volatile media card fitted in the drive. When the save is complete (or data cannot be saved, i.e. no card fitted or no space left) the scope is ready again to receive data. If *Scope Arm* (09.064) is set to 1 the scope will start to acquire data again.

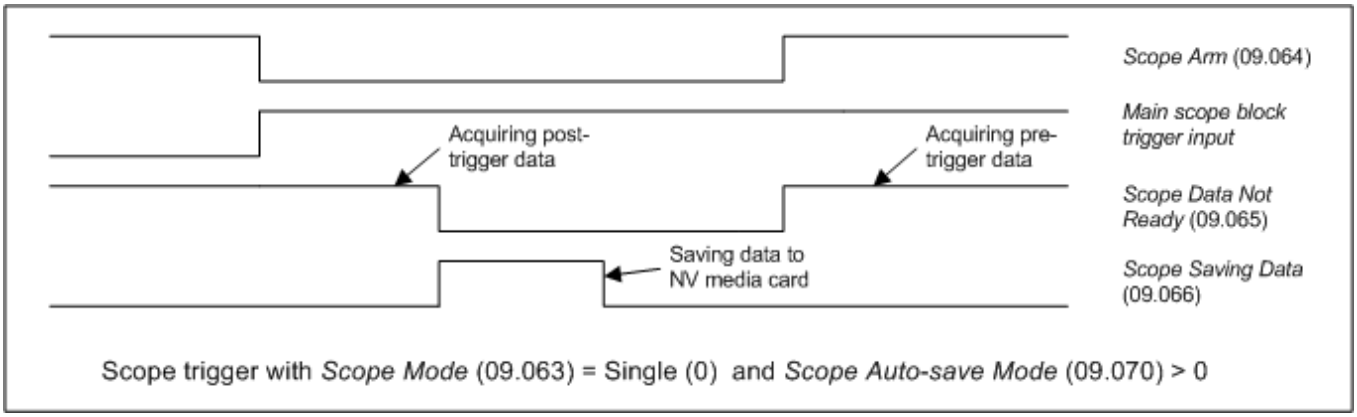

It is possible to read scope files via comms or into an option module. However, scope file transfer can only be initiated when *Scope Arm* (09.064) = 0, *Scope Data Not Ready* (09.065) = 0, *Scope Saving Data* (09.066) = 0 and at least one trace has been set up. While the file transfer is in progress *Scope Saving Data* (09.066) is set to 1.

The scope system is reset under any of the following conditions:

1. At power-up.
2. If the drive is reset when *Scope Trace 1 Source* (09.055) to *Scope Trace 4 Source* (09.058) have been modified.
3. The drive mode is changed.
4. If *Scope Mode* (09.063), *Scope Sample Time* (09.067) or *Scope Trigger Delay* (09.068) are modified.

When the scope is reset *Scope Arm* (09.064) is reset to 0 and the trace data is all cleared to 0..

Normal (1):
The scope operates in the same way as single mode except that *Scope Arm* (09.064) is automatically set back to 1 after a time delay of 1s once the post-trigger data has been acquired, and the scope data has been saved to a non-volatile media card if *Scope Auto-save Mode* (09.070) > 0.

Auto (2):
After the scope system is reset *Scope Data Not Ready* (09.065) is set to 1 and the scope begins to acquire data. Once the buffer is full *Scope Data Not Ready* (09.065) is set to 0 and the scope continues to acquire data. *Scope Arm* (09.064) has no effect on data acquisition. Provided *Scope Data Not Ready* (09.065) = 0 and *Scope Saving Data* (09.066) = 0 it is possible to read the data from the scope buffer as a scope file. Data acquisition is stopped when the file transfer begins. When the file transfer is complete, data acquisition begins again and *Scope Data Not Ready* (09.065) is set to 1 for a period that is long enough to fill the scope buffer with new data.

Parameter	**09.064 *Scope Arm***		
Short description	Set to arm the scope		
Mode	RFC-A		
Minimum	0	Maximum	1
Default	0	Units	
Type	1 Bit Volatile	Update Rate	250µs read
Display Format	Standard	Decimal Places	0
Coding	RW, NC		

See *Scope Mode* (09.063).

Parameter	**09.065 *Scope Data Not Ready***		
Short description	Shows that the data in the scope buffer is not ready to be read out		
Mode	RFC-A		
Minimum	0	Maximum	1
Default		Units	
Type	1 Bit Volatile	Update Rate	250µs write
Display Format	Standard	Decimal Places	0
Coding	RO, ND, NC, PT		

See *Scope Mode* (09.063).

Parameter	**09.066 *Scope Saving Data***		
Short description	Shows when the scope is saving data		
Mode	RFC-A		
Minimum	0	Maximum	1
Default		Units	
Type	1 Bit Volatile	Update Rate	Background write
Display Format	Standard	Decimal Places	0
Coding	RO, ND, NC, PT		

See *Scope Mode* (09.063).

Parameter	09.067 *Scope Sample Time*		
Short description	Defines the sample time of the scope		
Mode	RFC-A		
Minimum	1	Maximum	200
Default	1	Units	
Type	8 Bit User Save	Update Rate	Background read
Display Format	Standard	Decimal Places	0
Coding	RW, BU		

Scope Sample Time (09.067) defines the sample rate of the scope function for all traces in 1ms units (i.e. if *Scope Sample Time* (09.067) = 4, the sample time is 4ms).

Parameter	09.068 *Scope Trigger Delay*		
Short description	Defines how much pre-trigger data is stored by the scope		
Mode	RFC-A		
Minimum	0	Maximum	100
Default	0	Units	%
Type	8 Bit User Save	Update Rate	Background read
Display Format	Standard	Decimal Places	0
Coding	RW		

Scope Trigger Delay (09.068) defines how much data is stored before and after the scope is triggered. If *Scope Trigger Delay* (09.068) = 0% then no data is stored before the trigger and all the data is after the trigger. If *Scope Trigger Delay* (09.068) = 100% then no data is stored after the trigger, but all the data is before the trigger.

Parameter	09.069 *Scope Time Period*		
Short description	Shows the time period covered by the scope buffer		
Mode	RFC-A		
Minimum	0.00	Maximum	200000.00
Default		Units	ms
Type	32 Bit Volatile	Update Rate	Background write
Display Format	Standard	Decimal Places	2
Coding	RO, ND, NC, PT		

The scope function can capture up to 4000 bytes of parameter data. The *Scope Time Period* (09.069) gives the length of the time period covered by the scope buffer which depends on the number of traces stored, the sample time and the size of the parameters used as trace sources.

Scope Time Period (09.069) = 4000 x 1ms x *Scope Sample Time* (09.067) / Size of trace data

Size of trace data is the sum of the number of bytes in each of the trace sources selected by *Scope Trace 1 Source* (09.055) to *Scope Trace 4 Source* (09.058).

Parameter	09.070 *Scope Auto-save Mode*		
Short description	Defines the mode for auto-saving scope files to the NV media card		
Mode	RFC-A		
Minimum	0	Maximum	2
Default	0	Units	
Type	8 Bit User Save	Update Rate	Background read
Display Format	Standard	Decimal Places	0
Coding	RW, TE		

Value	*Text*
0	Disabled
1	Overwrite
2	Keep

Auto-save mode can be used to store a scope file on a non-volatile media card at each trigger event. The auto-save system is held in reset if *Scope Auto-save Reset* (09.072) = 1. When the auto-save system is reset all the scope files in scope file folder on the NV media card are deleted, *Scope Auto-save File Number* (09.071) is reset to 0 and the auto-save system is inactive. If any of the file operations fail during reset *Scope Auto-save Status* (09.073) is 3 (Failed) when the reset is removed.

The following conditions must be met for auto-saving to be active:

1. *Scope Auto-save Mode* (09.070) is non-zero
2. *Scope Auto-save Reset* (09.072) = 0
3. *Scope Auto-save Status* (09.073) = 1 (Active)
4. *Scope Mode* (09.063) = 0 (Single) or 1 (Normal)

If auto-saving is active an attempt is made to copy the scope file to a non-volatile media card fitted to the drive each time the post-trigger data has been acquired. The file name is SCP00XY.DAT, where XY is defined by *Scope Auto-save File Number* (09.071). If *Scope Auto-save Mode* (09.070) = 1 (Overwrite) then a file is over-written if it already exists. If *Scope Auto-save Mode* (09.070) = 2 (Keep) then if the file already exists the auto-save process is aborted. *Scope Auto-save File Number* (09.071) is incremented after a file is saved successfully and rolls over to 0 if it exceeds its maximum value.

If *Scope Auto-save Status* (09.073) = 0 (Disabled) and all the other conditions listed above for auto-saving to be active are met, then *Scope Auto-save Status* (09.073) changes to 1 (Active), so that auto-saving becomes active. If the scope file cannot be saved because the file exists and *Scope Auto-save Mode* (09.070) = 2 (Keep) then *Scope Auto-save Status* (09.073) is set to 2 (Stopped). If the scope file cannot be saved for any other reason then *Scope Auto-save Status* (09.073) is set to 3 (Failed). If *Scope Auto-save Status* (09.073) is no longer 1 (Active), auto-saving is aborted. Auto-saving can be made active again by setting *Scope Auto-save Reset* (09.072) to 1 and then to 0. If *Scope Auto-save Mode* (09.070) = 0 (Disabled) then *Scope Auto-save Status* (09.073) is set to 0 (Disabled), or if *Scope Auto-save Mode* (09.070) is non-zero then *Scope Auto-save Status* (09.073) is set to 1 (Active). It should be noted that *Scope Auto-save Status* (09.073) is a power-down save parameter, and so auto-save will remain inactive if *Scope Auto-save Status* (09.073) is 2 or 3 even if the drive is powered down and then powered up again.

Parameter	**09.071** ***Scope Auto-save File Number***		
Short description	Shows the file number to be used for the next auto-saved scope file		
Mode	RFC-A		
Minimum	0	Maximum	99
Default		Units	
Type	8 Bit Power Down Save	Update Rate	Background read/write
Display Format	Standard	Decimal Places	0
Coding	RO, ND, NC, PT		

See *Scope Auto-save Mode* (09.070).

Parameter	**09.072** ***Scope Auto-save Reset***		
Short description	Set to reset the scope auto-save function		
Mode	RFC-A		
Minimum	0	Maximum	1
Default	0	Units	
Type	1 Bit Volatile	Update Rate	Background read
Display Format	Standard	Decimal Places	0
Coding	RW		

See *Scope Auto-save Mode* (09.070).

Parameter	**09.073** ***Scope Auto-save Status***		
Short description	Shows the status of the scope auto-save function		
Mode	RFC-A		
Minimum	0	Maximum	3
Default		Units	
Type	8 Bit Power Down Save	Update Rate	Background write
Display Format	Standard	Decimal Places	0
Coding	RO, TE, ND, NC, PT		

Value	***Text***
0	Disabled
1	Active
2	Stopped
3	Failed

See *Scope Auto-save Mode* (09.070).

Menu 10 Single Line Descriptions − *Status and Trips*

Mode: RFC-A

Parameter		Range	Default	Type					
10.001	Drive Healthy	Off (0) or On (1)		RO	Bit	ND	NC	PT	
10.002	Drive Active	Off (0) or On (1)		RO	Bit	ND	NC	PT	
10.003	Zero Frequency	Off (0) or On (1)		RO	Bit	ND	NC	PT	
10.004	Running At Or Below Minimum Frequency	Off (0) or On (1)		RO	Bit	ND	NC	PT	
10.005	Below Set Frequency	Off (0) or On (1)		RO	Bit	ND	NC	PT	
10.006	At Frequency	Off (0) or On (1)		RO	Bit	ND	NC	PT	
10.007	Above Set Frequency	Off (0) or On (1)		RO	Bit	ND	NC	PT	
10.008	Rated Load Reached	Off (0) or On (1)		RO	Bit	ND	NC	PT	
10.009	Current Limit Active	Off (0) or On (1)		RO	Bit	ND	NC	PT	
10.010	Regenerating	Off (0) or On (1)		RO	Bit	ND	NC	PT	
10.011	Braking IGBT Active	Off (0) or On (1)		RO	Bit	ND	NC	PT	
10.012	Braking Resistor Alarm	Off (0) or On (1)		RO	Bit	ND	NC	PT	
10.013	Reverse Direction Commanded	Off (0) or On (1)		RO	Bit	ND	NC	PT	
10.014	Reverse Direction Running	Off (0) or On (1)		RO	Bit	ND	NC	PT	
10.015	Supply Loss	Off (0) or On (1)		RO	Bit	ND	NC	PT	
10.016	Under Voltage Active	Off (0) or On (1)		RO	Bit	ND	NC	PT	
10.017	Motor Overload Alarm	Off (0) or On (1)		RO	Bit	ND	NC	PT	
10.018	Drive Over-temperature Alarm	Off (0) or On (1)		RO	Bit	ND	NC	PT	
10.019	Drive Warning	Off (0) or On (1)		RO	Bit	ND	NC	PT	
10.020	Trip 0	0 to 255		RO	Txt	ND	NC	PT	PS
10.021	Trip 1	0 to 255		RO	Txt	ND	NC	PT	PS
10.022	Trip 2	0 to 255		RO	Txt	ND	NC	PT	PS
10.023	Trip 3	0 to 255		RO	Txt	ND	NC	PT	PS
10.024	Trip 4	0 to 255		RO	Txt	ND	NC	PT	PS
10.025	Trip 5	0 to 255		RO	Txt	ND	NC	PT	PS
10.026	Trip 6	0 to 255		RO	Txt	ND	NC	PT	PS
10.027	Trip 7	0 to 255		RO	Txt	ND	NC	PT	PS
10.028	Trip 8	0 to 255		RO	Txt	ND	NC	PT	PS
10.029	Trip 9	0 to 255		RO	Txt	ND	NC	PT	PS
10.030	Braking Resistor Rated Power	0.0 to 99999.9 kW	0.0 kW	RW	Num				US
10.031	Braking Resistor Thermal Time Constant	0.00 to 1500.00 s	0.00 s	RW	Num				US
10.032	External Trip	Off (0) or On (1)	Off (0)	RW	Bit		NC		
10.033	Drive Reset	Off (0) or On (1)	Off (0)	RW	Bit		NC		
10.034	Number Of Auto-reset Attempts	None (0), 1 (1), 2 (2), 3 (3), 4 (4), 5 (5), Infinite (6)	None (0)	RW	Txt				US
10.035	Auto-reset Delay	1.0 to 600.0 s	1.0 s	RW	Num				US
10.036	Auto-reset Hold Drive Healthy	Off (0) or On (1)	Off (0)	RW	Bit				US
10.037	Action On Trip Detection	00000 to 11111	00000	RW	Bin				US
10.038	User Trip	0 to 255		RW	Num	ND	NC		
10.039	Braking Resistor Thermal Accumulator	0.0 to 100.0 %		RO	Num	ND	NC	PT	
10.040	Status Word	000000000000000 to 111111111111111		RO	Bin	ND	NC	PT	
10.041	Trip 0 Date	00-00-00 to 31-12-99		RO	Date	ND	NC	PT	PS
10.042	Trip 0 Time	00:00:00 to 23:59:59		RO	Time	ND	NC	PT	PS
10.043	Trip 1 Date	00-00-00 to 31-12-99		RO	Date	ND	NC	PT	PS
10.044	Trip 1 Time	00:00:00 to 23:59:59		RO	Time	ND	NC	PT	PS
10.045	Trip 2 Date	00-00-00 to 31-12-99		RO	Date	ND	NC	PT	PS
10.046	Trip 2 Time	00:00:00 to 23:59:59		RO	Time	ND	NC	PT	PS
10.047	Trip 3 Date	00-00-00 to 31-12-99		RO	Date	ND	NC	PT	PS
10.048	Trip 3 Time	00:00:00 to 23:59:59		RO	Time	ND	NC	PT	PS
10.049	Trip 4 Date	00-00-00 to 31-12-99		RO	Date	ND	NC	PT	PS
10.050	Trip 4 Time	00:00:00 to 23:59:59		RO	Time	ND	NC	PT	PS
10.051	Trip 5 Date	00-00-00 to 31-12-99		RO	Date	ND	NC	PT	PS
10.052	Trip 5 Time	00:00:00 to 23:59:59		RO	Time	ND	NC	PT	PS
10.053	Trip 6 Date	00-00-00 to 31-12-99		RO	Date	ND	NC	PT	PS
10.054	Trip 6 Time	00:00:00 to 23:59:59		RO	Time	ND	NC	PT	PS
10.055	Trip 7 Date	00-00-00 to 31-12-99		RO	Date	ND	NC	PT	PS
10.056	Trip 7 Time	00:00:00 to 23:59:59		RO	Time	ND	NC	PT	PS
10.057	Trip 8 Date	00-00-00 to 31-12-99		RO	Date	ND	NC	PT	PS
10.058	Trip 8 Time	00:00:00 to 23:59:59		RO	Time	ND	NC	PT	PS
10.059	Trip 9 Date	00-00-00 to 31-12-99		RO	Date	ND	NC	PT	PS
10.060	Trip 9 Time	00:00:00 to 23:59:59		RO	Time	ND	NC	PT	PS
10.061	Braking Resistor Resistance	0.00 to 10000.00 Ω	0.00 Ω	RW	Num				US
10.064	Remote Keypad Battery Low	Off (0) or On (1)		RO	Bit	ND	NC	PT	
10.065	Auto-tune Active	Off (0) or On (1)		RO	Bit	ND	NC	PT	

10.066	Limit Switch Active	Off (0) or On (1)		RO	Bit	ND	NC	PT	
10.068	Hold Drive Healthy on Under Voltage	Off (0) or On (1)	Off (0)	RW	Bit				US
10.069	Additional Status Bits	000000000000 to 111111111111		RO	Bin	ND	NC	PT	
10.070	Trip 0 Sub-trip Number	0 to 65535		RO	Num	ND	NC	PT	PS
10.071	Trip 1 Sub-trip Number	0 to 65535		RO	Num	ND	NC	PT	PS
10.072	Trip 2 Sub-trip Number	0 to 65535		RO	Num	ND	NC	PT	PS
10.073	Trip 3 Sub-trip Number	0 to 65535		RO	Num	ND	NC	PT	PS
10.074	Trip 4 Sub-trip Number	0 to 65535		RO	Num	ND	NC	PT	PS
10.075	Trip 5 Sub-trip Number	0 to 65535		RO	Num	ND	NC	PT	PS
10.076	Trip 6 Sub-trip Number	0 to 65535		RO	Num	ND	NC	PT	PS
10.077	Trip 7 Sub-trip Number	0 to 65535		RO	Num	ND	NC	PT	PS
10.078	Trip 8 Sub-trip Number	0 to 65535		RO	Num	ND	NC	PT	PS
10.079	Trip 9 Sub-trip Number	0 to 65535		RO	Num	ND	NC	PT	PS
10.080	Stop Motor	Off (0) or On (1)		RO	Bit	ND	NC	PT	
10.081	Phase Loss	Off (0) or On (1)		RO	Bit	ND	NC	PT	
10.090	Drive Ready	Off (0) or On (1)		RO	Bit	ND	NC	PT	
10.101	Drive Status	Inhibit (0), Ready (1), Stop (2), Run (4), Supply Loss (5), Deceleration (6), dc Injection (7), Trip (9), Heat (14), Under Voltage (15)		RO	Txt	ND	NC	PT	
10.102	Trip Reset Source	0 to 1023		RO	Num	ND	NC	PT	PS
10.103	Trip Time Identifier	-2147483648 to 2147483647 ms		RO	Num	ND	NC	PT	
10.104	Active Alarm	None (0), Brake Resistor (1), Motor Overload (2), Drive Overload (4), Auto Tune (5), Limit Switch (6), Option Slot 1 (9), Low AC (13), Current limit (14), 24V Backup Lost (15), Fan (16)		RO	Txt	ND	NC	PT	
10.106	Potential Drive Damage Conditions	00 to 11		RO	Bin	ND	NC	PT	PS
10.107	Low AC Alarm	Off (0) or On (1)		RO	Bit	ND	NC	PT	
10.108	Reversed cooling fan detected	Off (0) or On (1)		RO	Bit	ND	NC	PT	

RW	Read / Write	RO	Read-only	Bit	Bit parameter	Txt	Text string	Date	Date parameter	Time	Time parameter
Chr	Character parameter	Bin	Binary parameter	IP	IP address	Mac	MAC address	Ver	Version number	SMP	Slot, menu, parameter
Num	Number parameter	DE	Destination	ND	No default value	RA	Rating dependent	NC	Non-copyable	PT	Protected
FI	Filtered	US	User save	PS	Power-down save						

Menu 10 − *Status and Trips*

Mode: RFC-A

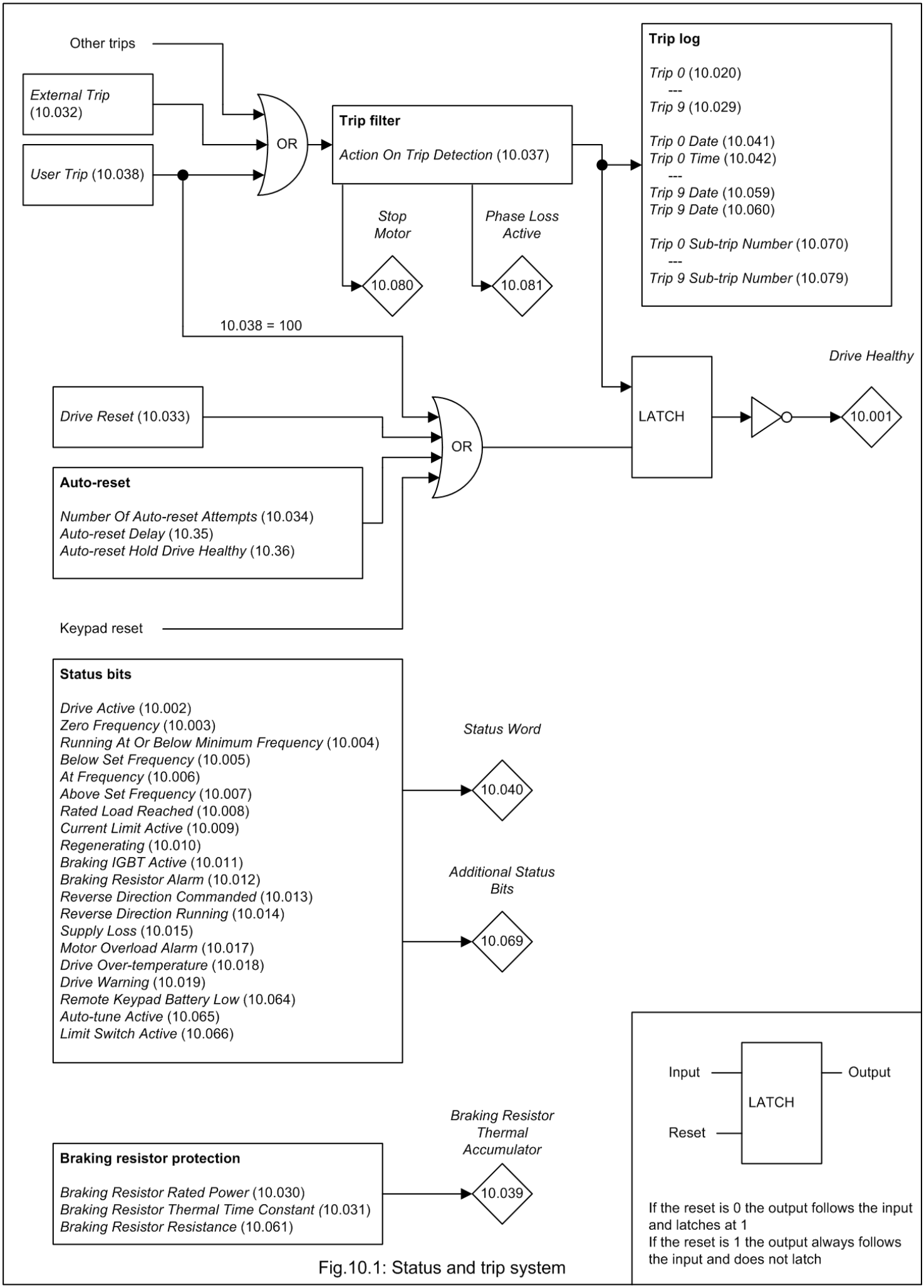

Fig.10.1: Status and trip system

Parameter	10.001 *Drive Healthy*		
Short description	Indicates that the drive is healthy		
Mode	RFC-A		
Minimum	0	Maximum	1
Default		Units	
Type	1 Bit Volatile	Update Rate	Background write
Display Format	Standard	Decimal Places	0
Coding	RO, ND, NC, PT		

Drive Healthy (10.001) indicates that the drive is not in the trip or the under voltage state if it is set to one. If *Auto-reset Hold Drive Healthy* (10.036) = 1 and auto-reset is being used, *Drive Healthy* (10.001) is not cleared until all auto-resets have been attempted and the next trip occurs.

Parameter	10.002 *Drive Active*		
Short description	Indicates that the inverter is active		
Mode	RFC-A		
Minimum	0	Maximum	1
Default		Units	
Type	1 Bit Volatile	Update Rate	Background write
Display Format	Standard	Decimal Places	0
Coding	RO, ND, NC, PT		

If the drive inverter is active *Drive Active* (10.002) is set to one, otherwise it is zero.

Parameter	10.003 *Zero Frequency*		
Short description	Indicates that the frequency is below the zero frequency threshold		
Mode	RFC-A		
Minimum	0	Maximum	1
Default		Units	
Type	1 Bit Volatile	Update Rate	Background write
Display Format	Standard	Decimal Places	0
Coding	RO, ND, NC, PT		

Zero Frequency (10.003) is set to one under the zero frequency conditions, otherwise it is zero. See *Zero Frequency Threshold* (03.005).

Parameter	10.004 *Running At Or Below Minimum Frequency*		
Short description	Indicates that the drive is running at or below the minimum frequency		
Mode	RFC-A		
Minimum	0	Maximum	1
Default		Units	
Type	1 Bit Volatile	Update Rate	Background write
Display Format	Standard	Decimal Places	0
Coding	RO, ND, NC, PT		

If *Bipolar Reference Enable* (01.010) = 1 then *Running At Or Below Minimum Frequency* (10.004) operates in the same way as *Zero Frequency* (10.003). If *Bipolar Reference Enable* (01.010) = 0 then *Running At Or Below Minimum Frequency* (10.004) is set if *Estimated Frequency* (03.002) ≤ *Minimum Speed* (01.007) + 0.5Hz.

If motor map 2 is active then *M2 Minimum Speed* (21.002) is used instead of *Minimum Speed* (01.007).

Parameter	10.005 *Below Set Frequency*		
Short description	Indicates that the drive is running below the set frequency		
Mode	RFC-A		
Minimum	0	Maximum	1
Default		Units	
Type	1 Bit Volatile	Update Rate	Background write
Display Format	Standard	Decimal Places	0
Coding	RO, ND, NC, PT		

See *At Frequency Lower Limit* (03.006).

Parameter	10.006 *At Frequency*		
Short description	Indicates that the drive is running at the set frequency		
Mode	RFC-A		
Minimum	0	Maximum	1
Default		Units	
Type	1 Bit Volatile	Update Rate	Background write
Display Format	Standard	Decimal Places	0
Coding	RO, ND, NC, PT		

See *At Frequency Lower Limit* (03.006).

Parameter	10.007 *Above Set Frequency*		
Short description	Indicates that the drive is running above the set frequency		
Mode	RFC-A		
Minimum	0	Maximum	1
Default		Units	
Type	1 Bit Volatile	Update Rate	Background write
Display Format	Standard	Decimal Places	0
Coding	RO, ND, NC, PT		

See *At Frequency Lower Limit* (03.006).

Parameter	10.008 *Rated Load Reached*		
Short description	Indicates that rated load has been reached		
Mode	RFC-A		
Minimum	0	Maximum	1
Default		Units	
Type	1 Bit Volatile	Update Rate	Background write
Display Format	Standard	Decimal Places	0
Coding	RO, ND, NC, PT		

Rated Load Reached (10.008) is set to one when the torque producing current is at or above its rated level. This condition is detected when the modulus of *Percentage Load* (04.020) is greater or equal to 100.0%. It should be noted that this is an indication based on the level of current and not torque, which means that if field weakening is active a value of one in *Rated Load Reached* (10.008) does not necessarily mean that the motor is producing rated torque.

Parameter	10.009 *Current Limit Active*		
Short description	Indicates that the current limit is active		
Mode	RFC-A		
Minimum	0	Maximum	1
Default		Units	
Type	1 Bit Volatile	Update Rate	Background write
Display Format	Standard	Decimal Places	0
Coding	RO, ND, NC, PT		

Current Limit Active (10.009) is set to one if the current limit is active.

Parameter	10.010 *Regenerating*		
Short description	Indicates that power is being transferred from the motor to the drive		
Mode	RFC-A		
Minimum	0	Maximum	1
Default		Units	
Type	1 Bit Volatile	Update Rate	Background write
Display Format	Standard	Decimal Places	0
Coding	RO, ND, NC, PT		

Regenerating (10.010) is set to one if power is being transferred from the motor to the drive

Parameter	10.011 *Braking IGBT Active*		
Short description	Indicates that the braking IGBT is active		
Mode	RFC-A		
Minimum	0	Maximum	1
Default		Units	
Type	1 Bit Volatile	Update Rate	Background write
Display Format	Standard	Decimal Places	0
Coding	RO, ND, NC, PT		

Braking IGBT Active (10.011) is set to one if the braking IGBT is active. As the braking IGBT active periods may be short, each time the braking IGBT is switched on *Braking IGBT Active* (10.011) is set to one and remains at one for at least 0.5s.

Parameter	10.012 *Braking Resistor Alarm*		
Short description	Indicates that the braking IGBT is active and the braking resistor thermal accumulator is greater than 75%		
Mode	RFC-A		
Minimum	0	Maximum	1
Default		Units	
Type	1 Bit Volatile	Update Rate	Background write
Display Format	Standard	Decimal Places	0
Coding	RO, ND, NC, PT		

Braking Resistor Alarm (10.012) is set when the braking IGBT is active and *Braking Resistor Thermal Accumulator* (10.039) is greater than 75.00%. As the braking IGBT active periods may be short *Braking Resistor Alarm* (10.012) is always held on for at least 0.5s.

Parameter	10.013 *Reverse Direction Commanded*		
Short description	Indicates that the reverse direction has been commanded		
Mode	RFC-A		
Minimum	0	Maximum	1
Default		Units	
Type	1 Bit Volatile	Update Rate	Background write
Display Format	Standard	Decimal Places	0
Coding	RO, ND, NC, PT		

Reverse Direction Commanded (10.013) indicates the reference direction at the input to the ramp system. If the *Pre-ramp Reference* (01.003) is negative *Reverse Direction Commanded* (10.013) is one otherwise *Reverse Direction Commanded* (10.013) is zero.

Parameter	10.014 *Reverse Direction Running*		
Short description	Indicates that the drive is running in the reverse direction		
Mode	RFC-A		
Minimum	0	Maximum	1
Default		Units	
Type	1 Bit Volatile	Update Rate	Background write
Display Format	Standard	Decimal Places	0
Coding	RO, ND, NC, PT		

Reverse Direction Running (10.014) is set to one if the *Estimated Frequency* (03.002) is negative otherwise it is set to zero.

Parameter	10.015 *Supply Loss*		
Short description	Indicates that the drive is in the supply loss state		
Mode	RFC-A		
Minimum	0	Maximum	1
Default		Units	
Type	1 Bit Volatile	Update Rate	Background write
Display Format	Standard	Decimal Places	0
Coding	RO, ND, NC, PT		

Supply Loss (10.015) indicates that the drive is in the supply loss state. This condition can only occur if supply loss detection is enabled, i.e. *Supply Loss Mode* (06.003) is set to a non-zero value. In the supply loss state the drive will attempt to stop the motor or ride through the mains loss by absorbing energy from the motor load's rotation.

Parameter	10.016 *Under Voltage Active*		
Short description	Indicates that the drive is in the under voltage state		
Mode	RFC-A		
Minimum	0	Maximum	1
Default		Units	
Type	1 Bit Volatile	Update Rate	4ms write
Display Format	Standard	Decimal Places	0
Coding	RO, ND, NC, PT		

Under Voltage Active (10.016) indicates that the drive is in the under voltage state.

Parameter	10.017 *Motor Overload Alarm*		
Short description	Indicates that the motor overload accumulator is above 75% and the output current is high		
Mode	RFC-A		
Minimum	0	Maximum	1
Default		Units	
Type	1 Bit Volatile	Update Rate	Background write
Display Format	Standard	Decimal Places	0
Coding	RO, ND, NC, PT		

Motor Overload Alarm (10.017) is set if the drive output current is higher than the defined protection level and the *Motor Protection Accumulator* (04.019) > 75%. See *Motor Thermal Time Constant 1* (04.015) and *Thermal Protection Mode* (04.016) for more details.

Parameter	10.018 *Drive Over-temperature Alarm*		
Short description	Indicates that the drive over-temperature alarm is active		
Mode	RFC-A		
Minimum	0	Maximum	1
Default		Units	
Type	1 Bit Volatile	Update Rate	Background write
Display Format	Standard	Decimal Places	0
Coding	RO, ND, NC, PT		

Drive Over-temperature Alarm (10.018) is set if *Percentage Of Drive Thermal Trip Level* (07.036) is greater than 90%.

Parameter	10.019 *Drive Warning*		
Short description	Indicates that one or more of the drive warning alarms are active		
Mode	RFC-A		
Minimum	0	Maximum	1
Default		Units	
Type	1 Bit Volatile	Update Rate	Background write
Display Format	Standard	Decimal Places	0
Coding	RO, ND, NC, PT		

Drive Warning (10.019) is set to one if any of the drive warnings is active it is defined as

Drive Warning (10.019) = *Braking Resistor Alarm* (10.012) OR *Motor Overload Alarm* (10.017) OR *Drive Over-temperature Alarm* (10.018) OR *Low AC Alarm* (10.107)

Parameter	10.020 *Trip 0*		
Short description	Shows the current or last trip to have occurred		
Mode	RFC-A		
Minimum	0	Maximum	255
Default		Units	
Type	8 Bit Power Down Save	Update Rate	Write on trip
Display Format	Standard	Decimal Places	0
Coding	RO, TE, ND, NC, PT, BU		

Click here to view trips in numerical order.

Value	Text	Description
28	An Input 1 Loss	Current loop loss on analog input 1
189	An Input 1 OI	Current loop overload on analog input 1
29	An Input 2 Loss	Current loop loss on analog input 2
190	An Input 2 OI	Current loop overload on analog input 2
39	An Input 3 Loss	Current loop loss on Analog input 3 (Commander ID30x only)
191	An Input 3 OI	Current loop overload on analog input 3 (Commander ID30x only)
11	Autotune 1	Autotune trip 1
13	Autotune 3	Autotune trip 3
18	Autotune Stopped	The Autotune was interrupted
19	Brake R Too Hot	Brake resistor over temperature
185	Card Access	Communication failure with NV media card detected
178	Card Busy	NV media card in use
188	Card Compare	NV media card data and drive data is not the same
179	Card Data Exists	NV media card data already exists
187	Card Drive Mode	Transfer of data between drives operating in different modes detected
182	Card Error	NV media card data structure error detected
184	Card Full	NV media card is full
183	Card No Data	Attempt to read non-existant data detected
180	Card Option	Option difference detected
175	Card Product	Product difference detected
186	Card Rating	Transfer of data between drives of different ratings detected
181	Card Read Only	Attempt to overwrite protected data detected
35	Control Word	Control word trip (bit 12)
97	Data Changing	Drive has become active while data is being updated
110	DCCT Ref	DC Current transformer failure (size 5 and above)
246	Derivative ID	Derivative Image error
248	Derivative Image	Derivative program error
199	Destination	A parameter is being changed by more than 1 routing destination
232	Drive config	Incorrect configuration data
31	EEPROM Fail	Non-volatile memory failure
6	External Trip	External trip generated by the application
173	Fan fail	Cooling fan failure
247	File changed	Configuration data within the drive has changed
237	FW incompatible	The power stage and control board firmware versions are not compatible
250	Hot Rect/Brake	
231	I cal. range	Current feedback calibration range error
26	I/O Overload	Overload on 24V or digital outputs
34	Keypad Mode	Keypad communication failure
90	LF Power Comms	Communication link failure in the power stage (size 5 and above)
20	Motor Too Hot	Motor over temperature
236	No power board	No power stage detected by the Control board
0	None	No trip recorded
219	OHt Control	Control board over temperature
27	OHt dc bus	Overload on DC bus components
21	OHt Inverter	Inverter IGBT junction over temperature
22	OHt Power	Power stage over temperature
3	OI ac	Over current at the motor terminals
4	OI Brake	Over current in the brake IGBT
92	OI Snubber	Over current in snubber components (size 5 and above)
98	Out Phase Loss	One of the motor windings is not drawing current
228	Output phase U	Over current on U phase
229	Output phase V	Over current on V phase
230	Output phase W	Over current on W phase
7	Over Speed	Motor over speed
2	Over Volts	DC Bus voltage is high
32	Phase Loss	Input Phase Loss
235	Power Board HF	Harware Fault in the power stage processor detected
245	Power Boot Mode	Power stage processor is in its boot loader
93	Power Comms	Communication link failure between Control board and power stage
220	Power Data	Configuration data failure
37	Power Down Save	Power down saved parameters have been corrupted
5	PSU	Internal Power Supply fault
1	Reserved	
9	Reserved	

10	Reserved	
12	Reserved	
14	Reserved	
15	Reserved	
16	Reserved	
17	Reserved	
23	Reserved	
38	Reserved	
91	Reserved	
94	Reserved	
95	Reserved	
99	Reserved	
101	Reserved	
102	Reserved	
103	Reserved	
104	Reserved	
105	Reserved	
106	Reserved	
107	Reserved	
108	Reserved	
109	Reserved	
111	Reserved	
168	Reserved	
169	Reserved	
170	Reserved	
171	Reserved	
172	Reserved	
174	Reserved	
176	Reserved	
177	Reserved	
192	Reserved	
193	Reserved	
194	Reserved	
195	Reserved	
196	Reserved	
197	Reserved	
198	Reserved	
205	Reserved	
206	Reserved	
207	Reserved	
208	Reserved	
209	Reserved	
210	Reserved	
211	Reserved	
212	Reserved	
213	Reserved	
214	Reserved	
215	Reserved	
216	Reserved	
217	Reserved	
222	Reserved	
223	Reserved	
224	Reserved	
225	Reserved	
233	Reserved	
238	Reserved	
239	Reserved	
240	Reserved	
241	Reserved	
242	Reserved	
243	Reserved	
244	Reserved	
251	Reserved	
252	Reserved	
253	Reserved	
254	Reserved	
100	Reset	Not valid
255	Reset Logs	Not valid - value used to reset the trip log
33	Resistance	Resistance measurement failure
204	Slot1 Different	Option module has changed

202	Slot1 Error	Error generated by the option module
200	Slot1 HF	Error in communication with an option module
203	Slot1 Not Fitted	Option module no longer fitted
201	Slot1 Watchdog	Option module has not updated the option watchdog
226	Soft Start	Soft start hardware failure
234	STO error	No STO harware detected
221	Stored HF	Indicates that the drive had a Hardware fault on the last power down
227	Sub-array RAM	RAM allocation failure
218	Temp Feedback	Internal temperature monitoring fault
25	Th Short Circuit	Motor thermistor short circuit
24	Thermistor	Motor thermistor over temperature
8	User OI ac	User defined motor Over current trip
96	User Prog Trip	On board user program trip
249	User Program	User program error
36	User Save	User saved parameter set has been corrupted
40	User Trip 40	
41	User Trip 41	
42	User Trip 42	
43	User Trip 43	
44	User Trip 44	
45	User Trip 45	
46	User Trip 46	
47	User Trip 47	
48	User Trip 48	
49	User Trip 49	
50	User Trip 50	
51	User Trip 51	
52	User Trip 52	
53	User Trip 53	
54	User Trip 54	
55	User Trip 55	
56	User Trip 56	
57	User Trip 57	
58	User Trip 58	
59	User Trip 59	
60	User Trip 60	
61	User Trip 61	
62	User Trip 62	
63	User Trip 63	
64	User Trip 64	
65	User Trip 65	
66	User Trip 66	
67	User Trip 67	
68	User Trip 68	
69	User Trip 69	
70	User Trip 70	
71	User Trip 71	
72	User Trip 72	
73	User Trip 73	
74	User Trip 74	
75	User Trip 75	
76	User Trip 76	
77	User Trip 77	
78	User Trip 78	
79	User Trip 79	
80	User Trip 80	
81	User Trip 81	
82	User Trip 82	
83	User Trip 83	
84	User Trip 84	
85	User Trip 85	
86	User Trip 86	
87	User Trip 87	
88	User Trip 88	
89	User Trip 89	
112	User Trip 112	
113	User Trip 113	
114	User Trip 114	
115	User Trip 115	

116	User Trip 116	
117	User Trip 117	
118	User Trip 118	
119	User Trip 119	
120	User Trip 120	
121	User Trip 121	
122	User Trip 122	
123	User Trip 123	
124	User Trip 124	
125	User Trip 125	
126	User Trip 126	
127	User Trip 127	
128	User Trip 128	
129	User Trip 129	
130	User Trip 130	
131	User Trip 131	
132	User Trip 132	
133	User Trip 133	
134	User Trip 134	
135	User Trip 135	
136	User Trip 136	
137	User Trip 137	
138	User Trip 138	
139	User Trip 139	
140	User Trip 140	
141	User Trip 141	
142	User Trip 142	
143	User Trip 143	
144	User Trip 144	
145	User Trip 145	
146	User Trip 146	
147	User Trip 147	
148	User Trip 148	
149	User Trip 149	
150	User Trip 150	
151	User Trip 151	
152	User Trip 152	
153	User Trip 153	
154	User Trip 154	
155	User Trip 155	
156	User Trip 156	
157	User Trip 157	
158	User Trip 158	
159	User Trip 159	
160	User Trip 160	
161	User Trip 161	
162	User Trip 162	
163	User Trip 163	
164	User Trip 164	
165	User Trip 165	
166	User Trip 166	
167	User Trip 167	
30	Watchdog	Control word watchdog timeout

Trip 0 (10.020) to *Trip 9* (10.029) store the most recent 10 trips that have occurred where Trip *Trip 0* (10.020) is the most recent and *Trip 9* (10.029) is the oldest. When a new trip occurs it is written to *Trip 0* (10.020) and all the other trips move down the log, with the oldest being lost.

The date and time when each trip occurs are also stored in the date and time log, i.e. *Trip 0 Date* (10.041) to *Trip 9 Time* (10.060). The date and time are taken from *Date* (06.016) and *Time* (06.017) (See *Date/Time Selector* (06.019)). Some trips have sub-trip numbers which give more detail about the reason for the trip. If a trip has a sub-trip number its value is stored in the sub-trip log, i.e. *Trip 0 Sub-trip Number* (10.070) to *Trip 9 Sub-trip Number* (10.079). If the trip does not have a sub-trip number then zero is stored in the sub-trip log.

Trip categories and priorities
Trips are grouped into the categories given in the table below. A trip can only occur when the drive is not tripped, or if it is already tripped and the new trip has a higher priority than the active trip (i.e. lower priority number). Unless otherwise stated a trip cannot be reset until 1.0s after it has been initiated.

Priority	Category	Trips	Comments
1	Internal faults	HF01 - HF19	These are fatal problems that cannot be reset. All drive features are inactive after any of these trips occur. If a basic keypad is fitted it will show the trip, but the keypad will not function. These trips are not stored in the trip log.
1	Stored HF trip	*Stored HF*	This trip cannot be cleared unless 1299 is entered into *Parameter mm.000* (mm.000) and a reset is initiated.
2	Non-resettable trips	Trip numbers 218 - 247 and *Slot1 HF*	These trips cannot be reset.
3	Volatile memory failure	*EEPROM Fail*	This can only be reset if *Parameter mm.000* (mm.000) is set to 1233 or 1244, or if *Load Defaults* (11.043) is set to a non-zero value
4	Non-volatile media trips	Trip numbers 174, 175 and 177 - 188	These trips are priority 5 during power-up
5	Trips with extended reset times	*OI ac* and *OI Brake*	These trips cannot be reset until 10s after the trip was initiated.
5	Phase loss and d.c. link power circuit protection	*Phase Loss* and *OHt dc bus*	The drive will attempt to stop the motor before tripping if a *Phase Loss*.000 trip occurs unless this feature has been disabled (see *Action On Trip Detection* (10.037)). The drive will always attempt to stop the motor before tripping if an *OHt dc bus* occurs.
5	Standard trips	All other trips	

Trips {HF01} to {HF19} are internal faults that do not have trip numbers. If one of these trips occurs, the main drive processor has detected an irrecoverable error. All drive functions are stopped and the trip message will be displayed on the drive keypad. The error can only be reset by powering the drive down and up again. The table below gives the reasons for internal faults and their corresponding trip

<table>
<tr><th>Trip</th><th>Reason</th></tr>
<tr><td>{HF01}</td><td>CPU hardware fault during exception processing</td></tr>
<tr><td>{HF02}</td><td>CPU memory management fault is an exception that occurs because of a memory protection related fault</td></tr>
<tr><td>{HF03}</td><td>CPU has detected a Bus Fault. A Bus Fault is an exception that occurs because of a memory related fault for an instruction or data memory transaction. This might be from an error detected on a bus in the memory system.</td></tr>
<tr><td>{HF04}</td><td>CPU has detected a usage fault:
A Usage Fault is an exception that occurs because of a fault related to instruction execution. This includes:
an undefined instruction
an illegal unaligned access
invalid state on instruction execution
an error on exception return.
The following can cause a Usage Fault when the core is configured to report them:
an unaligned address on word and half word memory access
division by zero.</td></tr>
<tr><td>{HF05}</td><td>Reserved</td></tr>
<tr><td>{HF06}</td><td>Reserved</td></tr>
<tr><td>{HF07}</td><td>Watchdog failure</td></tr>
<tr><td>{HF08}</td><td>CPU Interrupt crash. Interrupt crash level indicated by subtrip number.</td></tr>
<tr><td>{HF09}</td><td>Free store overflow</td></tr>
<tr><td>{HF10}</td><td>Reserved</td></tr>
<tr><td>{HF11}</td><td>The HF11 trip indicates that a non-volatile memory comms error has occurred.
<table>
<tr><th>Sub-trip</th><th>Reason</th><th>Recommended action</th></tr>
<tr><td>1</td><td>Non-volatile memory comms error.</td><td>Hardware fault – contact the supplier of the drive.</td></tr>
<tr><td>2</td><td>EEPROM size is incompatible with the user firmware.</td><td>After 1min the drive will go to its bootloader. Re-program drive with compatible user firmware using UniMConnect</td></tr>
</table></td></tr>
<tr><td>{HF12}</td><td>Stack overflow
<table>
<tr><th>Sub-trip</th><th>Reason</th></tr>
<tr><td>1</td><td>User program or derivative background stack overflow</td></tr>
<tr><td>2</td><td>User program or derivative timed stack overflow</td></tr>
<tr><td>3</td><td>Main system interrupt stack overflow</td></tr>
<tr><td>4</td><td>Main system background stack overflow</td></tr>
</table></td></tr>
<tr><td>{HF13}</td><td>Reserved</td></tr>
<tr><td>{HF14}</td><td>Reserved</td></tr>
<tr><td>{HF15}</td><td>Reserved</td></tr>
<tr><td>{HF16}</td><td>RTOS error (the background task has returned)</td></tr>
<tr><td>{HF17}</td><td>Reserved</td></tr>
<tr><td></td><td>The HF18 trip indicates that the internal flash memory has failed when writing option module parameter data. The reason for the trip can be identified by the sub-trip number.</td></tr>
</table>

{HF18}	**Sub-trip**	**Reason**
	1	Option module initialization timed out
	2	Programming error while writing menu in flash
	3	Erase flash block containing setup menus failed
	4	Erase flash block containing application menus failed
	5	Incorrect setup menu CRC contained in flash
	6	Incorrect application menu CRC contained in flash
{HF19}	The *HF19* trip indicates that the drive firmware is partially or completely deleted. The drive is now in its bootloader and is waiting for a new image to be downloaded using UniMConnect. Once a new image is downloaded, the drive can run normally.	

When the drive is subsequently powered up a *Stored HF* trip is initiated where the sub-trip number is the number of the HF trip that last occurred. This trip will occur at every power-up until it is reset. The trip can only be reset by first entering 1299 into *Parameter mm.000* (mm.000). If the drive is powered up and a *Stored HF* trip occurs, *Onboard User Program: Enable* (11.047) is reset to zero to prevent the on-board user program from running. This ensures that the user program can be changed or erased in case it causes an HF trip at every power-up.

Trip descriptions
Trips shown in the table below can be generated either from the drive control system or from the power system. The sub-trip number which is in the form xxyzz is used to identify the source of the trip. The digits xx are 00 for a trip generated by the control system or the number of a power module if generated by the power system. If the drive is not a multi-power module drive then xx will always have a value of 1 if the trip is related to the power system. The y digit is used to identify the location of a trip which is generated by a rectifier module connected to a power module. Where the y digit is relevant it will have a value of 1 or more, otherwise it will be 0. The zz digits give the reason for the trip and are defined in each trip description.

Over Volts	*OHt dc bus*
OI ac	*Phase Loss*
OI Brake	*LF Power Comms*
PSU	*OI Snubber*
OHt Inverter	*Temp Feedback*
OHt Power	*Power Data*

Parameter	**10.021** ***Trip 1***		
Short description	Shows the 2nd from last trip to have occurred		
Mode	RFC-A		
Minimum	0	Maximum	255
Default		Units	
Type	8 Bit Power Down Save	Update Rate	Write on trip
Display Format	Standard	Decimal Places	0
Coding	RO, TE, ND, NC, PT, BU		

See *Trip 0* (10.020).

Parameter	**10.022** ***Trip 2***		
Short description	Shows the 3rd from last trip to have occurred		
Mode	RFC-A		
Minimum	0	Maximum	255
Default		Units	
Type	8 Bit Power Down Save	Update Rate	Write on trip
Display Format	Standard	Decimal Places	0
Coding	RO, TE, ND, NC, PT, BU		

See *Trip 0* (10.020).

Parameter	**10.023** ***Trip 3***		
Short description	Shows the 4th from last trip to have occurred		
Mode	RFC-A		
Minimum	0	Maximum	255
Default		Units	
Type	8 Bit Power Down Save	Update Rate	Write on trip
Display Format	Standard	Decimal Places	0
Coding	RO, TE, ND, NC, PT, BU		

See *Trip 0* (10.020).

Parameter	10.024 *Trip 4*		
Short description	Shows the 5th from last trip to have occurred		
Mode	RFC-A		
Minimum	0	Maximum	255
Default		Units	
Type	8 Bit Power Down Save	Update Rate	Write on trip
Display Format	Standard	Decimal Places	0
Coding	RO, TE, ND, NC, PT, BU		

See *Trip 0* (10.020).

Parameter	10.025 *Trip 5*		
Short description	Shows the 6th from last trip to have occurred		
Mode	RFC-A		
Minimum	0	Maximum	255
Default		Units	
Type	8 Bit Power Down Save	Update Rate	Write on trip
Display Format	Standard	Decimal Places	0
Coding	RO, TE, ND, NC, PT, BU		

See *Trip 0* (10.020).

Parameter	10.026 *Trip 6*		
Short description	Shows the 7th from last trip to have occurred		
Mode	RFC-A		
Minimum	0	Maximum	255
Default		Units	
Type	8 Bit Power Down Save	Update Rate	Write on trip
Display Format	Standard	Decimal Places	0
Coding	RO, TE, ND, NC, PT, BU		

See *Trip 0* (10.020).

Parameter	10.027 *Trip 7*		
Short description	Shows the 8th from last trip to have occurred		
Mode	RFC-A		
Minimum	0	Maximum	255
Default		Units	
Type	8 Bit Power Down Save	Update Rate	Write on trip
Display Format	Standard	Decimal Places	0
Coding	RO, TE, ND, NC, PT, BU		

See *Trip 0* (10.020).

Parameter	10.028 *Trip 8*		
Short description	Shows the 9th from last trip to have occurred		
Mode	RFC-A		
Minimum	0	Maximum	255
Default		Units	
Type	8 Bit Power Down Save	Update Rate	Write on trip
Display Format	Standard	Decimal Places	0
Coding	RO, TE, ND, NC, PT, BU		

See *Trip 0* (10.020).

Parameter	10.029 *Trip 9*		
Short description	Shows the 10th from last trip to have occurred		
Mode	RFC-A		
Minimum	0	Maximum	255
Default		Units	
Type	8 Bit Power Down Save	Update Rate	Write on trip
Display Format	Standard	Decimal Places	0
Coding	RO, TE, ND, NC, PT, BU		

See *Trip 0* (10.020).

Parameter	10.030 *Braking Resistor Rated Power*		
Short description	Set to the rated power of the braking resistor		
Mode	RFC-A		
Minimum	0.0	Maximum	99999.9
Default	0.0	Units	kW
Type	32 Bit User Save	Update Rate	Background read
Display Format	Standard	Decimal Places	1
Coding	RW		

A thermal protection system is provided for the braking resistor. If *Braking Resistor Rated Power* (10.030) is set to zero this protection system is disabled and the *Braking Resistor Thermal Accumulator* (10.039) is held at zero. If braking resistor thermal protection is required the *Braking Resistor Rated Power* (10.030), *Braking Resistor Thermal Time Constant* (10.031) and *Braking Resistor Resistance* (10.061) should be set up with the braking resistor parameters. The thermal time constant of the resistor can be calculated from the single pulse energy rating (E in Joules) and continuous power rating (P in Watts) of the resistor.

Braking Resistor Thermal Time Constant (10.031) = $\tau = E / P$

The braking resistor is protected with a single time constant model as shown below.

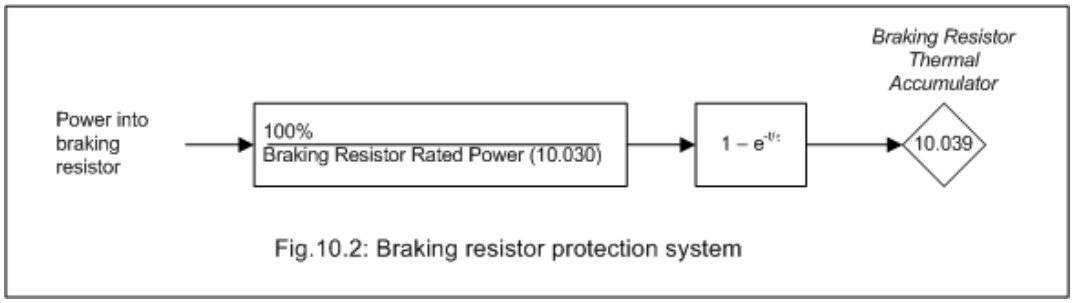

Fig.10.2: Braking resistor protection system

The drive monitors the power flowing into the braking resistor and updates the *Braking Resistor Thermal Accumulator* (10.039). If bit 1 of *Action On Trip Detection* (10.037) = 0 and the accumulator reaches 100% an *Brake R Too Hot* trip is initiated. If bit 1 of *Action On Trip Detection* (10.037) = 1 and the accumulator reaches 100% the braking IGBT is disabled until the accumulator falls below 95.0%.

Parameter	**10.031 *Braking Resistor Thermal Time Constant***		
Short description	Set to the thermal time constant of the braking resistor		
Mode	RFC-A		
Minimum	0.00	Maximum	1500.00
Default	0.00	Units	s
Type	32 Bit User Save	Update Rate	Background read
Display Format	Standard	Decimal Places	2
Coding	RW		

See *Braking Resistor Rated Power* (10.030) .

Parameter	**10.032 *External Trip***		
Short description	Set to initiate an external trip		
Mode	RFC-A		
Minimum	0	Maximum	1
Default	0	Units	
Type	1 Bit Volatile	Update Rate	Background read
Display Format	Standard	Decimal Places	0
Coding	RW, NC		

If *External Trip* (10.032) is set to one an *External Trip*.003 is initiated. A digital input can be routed to *External Trip* (10.032) to provide an external trip input function.

Parameter	**10.033 *Drive Reset***		
Short description	Set to initiate a drive reset		
Mode	RFC-A		
Minimum	0	Maximum	1
Default	0	Units	
Type	1 Bit Volatile	Update Rate	Background read
Display Format	Standard	Decimal Places	0
Coding	RW, NC		

A 0 to 1 transition in *Drive Reset* (10.033) causes a drive reset. If a drive reset terminal is required a digital input should be routed to *Drive Reset* (10.033).

Parameter	**10.034 *Number Of Auto-reset Attempts***		
Short description	Set to the number of required auto-reset attempts		
Mode	RFC-A		
Minimum	0	Maximum	6
Default	0	Units	
Type	8 Bit User Save	Update Rate	Background read
Display Format	Standard	Decimal Places	0
Coding	RW, TE		

Value	***Text***
0	None
1	1
2	2
3	3
4	4
5	5
6	Infinite

If *Number Of Auto-reset Attempts* (10.034) = 0 then no auto-reset attempts are made. Any other value will cause the drive to automatically reset following a trip for the number of times programmed after a delay defined by *Auto-reset Delay* (10.035) subject to the minimum reset time allowed for the type of trip. Note that for some

trips the minimum is 10s. The auto-reset count is only incremented when the trip is the same as the previous trip otherwise it is reset to 0. When the auto-reset count reaches the programmed value, any further trip of the same value will not cause an auto-reset. If there has been no trip for 5 minutes then the auto-reset count is cleared. Auto reset will not occur after any trips with priority levels 1, 2 or 3 as defined in the *Trips* section of this guide. When a manual reset occurs the auto-reset counter is reset to zero.

If *Number Of Auto-reset Attempts* (10.034) = 6 the auto-reset counter is held at zero, and so there is no limit on the number of auto-reset attempts.

Parameter	**10.035 *Auto-reset Delay***		
Short description	Set to the required auto-reset delay		
Mode	RFC-A		
Minimum	1.0	Maximum	600.0
Default	1.0	Units	s
Type	16 Bit User Save	Update Rate	Background read
Display Format	Standard	Decimal Places	1
Coding	RW, BU		

See *Number Of Auto-reset Attempts* (10.034).

Parameter	**10.036 *Auto-reset Hold Drive Healthy***		
Short description	Set to hold drive healthy if futher auto-reset attempts are possible		
Mode	RFC-A		
Minimum	0	Maximum	1
Default	0	Units	
Type	1 Bit User Save	Update Rate	Background read
Display Format	Standard	Decimal Places	0
Coding	RW		

If *Auto-reset Hold Drive Healthy* (10.036) = 0 then *Drive Healthy* (10.001) is cleared every time the drive trips regardless of any auto-reset that may occur. If *Auto-reset Hold Drive Healthy* (10.036) = 1 then *Drive Healthy* (10.001) is not cleared on a trip if any further auto-reset attempts are possible. Note that if the under voltage state becomes active *Drive Healthy* (10.001) is always set to zero.

Parameter	**10.037 *Action On Trip Detection***		
Short description	Defines the action of the drive on detection of a trip		
Mode	RFC-A		
Minimum	0 (Display: 00000)	Maximum	31 (Display: 11111)
Default	0 (Display: 00000)	Units	
Type	8 Bit User Save	Update Rate	Background read
Display Format	Binary	Decimal Places	0
Coding	RW		

The bits in *Action On Trip Detection* (10.037) are defined as follows:

Bit 0: Stop on defined non-important trips
If bit 0 is set to one the drive will attempt to stop before tripping if any of the following trip conditions are detected: *I/O Overload*, *Keypad Mode*, *Motor Too Hot*, *EEPROM Fail* or user 24V failure.

Bit 1: Disable braking resistor overload detection
See *Braking Resistor Rated Power* (10.030).

Bit 2: Disable phase loss stop
Normally the drive will stop when the input phase loss condition is detected. If this bit is set to 1 the drive will continue to run and will only trip when the drive is brought to a stop by the user.

Bit 3: Disable braking resistor temperature monitoring
If hardware based braking resistor thermal monitoring is provided this can be disabled by setting this bit to one.

Bit 4: Disable parameter freeze on trip
If this bit is 0 then the parameters listed below are frozen on trip until the trip is cleared. If this bit is 1 then this feature is disabled.

Reference Selected (01.001)
Pre-skip Filter Reference (01.002)
Pre-ramp Reference (01.003)
Frequency Reference (03.045)
Estimated Frequency (03.002)
Frequency Error (03.003)
Frequency Controller Output (03.004)
Current Magnitude (04.001)
Torque Producing Current (04.002)
Magnetising Current (04.017)
Output Frequency (05.001)
Output Voltage (05.002)
Output Power (05.003)
D.c. Link Voltage (05.005)
Analog Input 1 (07.001)
Analog Input 2 (07.002)

Parameter	10.038 *User Trip*		
Short description	Defines which user trip is to occur		
Mode	RFC-A		
Minimum	0	Maximum	255
Default		Units	
Type	8 Bit Volatile	Update Rate	Background read
Display Format	Standard	Decimal Places	0
Coding	RW, ND, NC, BU		

When a value other than zero is written to the *User Trip* (10.038) the actions described in the following table are performed. The drive immediately writes the value back to zero. If the value is not included in the table, then the action is the same as if the trip with the same number (with sub-trip zero) occurred provided the drive is not already tripped.

Because the drive clears this parameter to 0 immediately, the value must be written via serial communication or user program if supported.

Action	*User Trip* (10.038)
No action	Numbers corresponding to priority 1, 2 or 3 trips
Drive reset	100
Clear trip logs (*Trip 0* (10.020) to *Trip 9* (10.029), *Trip 0 Date* (10.041) to *Trip 9 Time* (10.060) and *Trip 0 Sub-trip Number* (10.070) to *Trip 9 Sub-trip Number* (10.079))	255

Parameter	10.039 *Braking Resistor Thermal Accumulator*		
Short description	Shows the level of the braking resistor thermal accumulator		
Mode	RFC-A		
Minimum	0.0	Maximum	100.0
Default		Units	%
Type	16 Bit Volatile	Update Rate	Background write
Display Format	Standard	Decimal Places	1
Coding	RO, ND, NC, PT		

See *Braking Resistor Rated Power* (10.030).

Parameter	10.040 *Status Word*		
Short description	Shows the status word for the drive		
Mode	RFC-A		
Minimum	0 (Display: 000000000000000)	Maximum	32767 (Display: 111111111111111)
Default		Units	
Type	16 Bit Volatile	Update Rate	Background write
Display Format	Binary	Decimal Places	0
Coding	RO, ND, NC, PT		

The bits in *Status Word* (10.040) mirror the status bit parameters as shown below. Where the parameters do not exist in any mode the bit remains at zero.

Bit	Status parameter
0	*Drive Healthy* (10.001)
1	*Drive Active* (10.002)
2	*Zero Frequency* (10.003)
3	*Running At Or Below Minimum Frequency* (10.004)
4	*Below Set Frequency* (10.005)
5	*At Frequency* (10.006)
6	*Above Set Frequency* (10.007)
7	*Rated Load Reached* (10.008)
8	*Current Limit Active* (10.009)
9	*Regenerating* (10.010)
10	*Braking IGBT Active* (10.011)
11	*Braking Resistor Alarm* (10.012)
12	*Reverse Direction Commanded* (10.013)
13	*Reverse Direction Running* (10.014)
14	*Supply Loss* (10.015)

Because of the limited number of segments on drives with an LED display, these drives will indicate the parameter value as a decimal value rather than a binary value.

Parameter	10.041 *Trip 0 Date*		
Short description	Shows the date at which trip 0 occurred		
Mode	RFC-A		
Minimum	0 (Display: 00-00-00)	Maximum	311299 (Display: 31-12-99)
Default		Units	
Type	32 Bit Power Down Save	Update Rate	Write on trip
Display Format	Date	Decimal Places	0
Coding	RO, ND, NC, PT		

See *Trip 0* (10.020).

Parameter	**10.042 *Trip 0 Time***		
Short description	Shows the time at which trip 0 occurred		
Mode	RFC-A		
Minimum	0 (Display: 00:00:00)	Maximum	235959 (Display: 23:59:59)
Default		Units	
Type	32 Bit Power Down Save	Update Rate	Write on trip
Display Format	Time	Decimal Places	0
Coding	RO, ND, NC, PT		

See *Trip 0* (10.020).

Parameter	**10.043 *Trip 1 Date***		
Short description	Shows the date at which trip 1 occurred		
Mode	RFC-A		
Minimum	0 (Display: 00-00-00)	Maximum	311299 (Display: 31-12-99)
Default		Units	
Type	32 Bit Power Down Save	Update Rate	Write on trip
Display Format	Date	Decimal Places	0
Coding	RO, ND, NC, PT		

See *Trip 0* (10.020).

Parameter	**10.044 *Trip 1 Time***		
Short description	Shows the time at which trip 1 occurred		
Mode	RFC-A		
Minimum	0 (Display: 00:00:00)	Maximum	235959 (Display: 23:59:59)
Default		Units	
Type	32 Bit Power Down Save	Update Rate	Write on trip
Display Format	Time	Decimal Places	0
Coding	RO, ND, NC, PT		

See *Trip 0* (10.020).

Parameter	**10.045 *Trip 2 Date***		
Short description	Shows the date at which trip 2 occurred		
Mode	RFC-A		
Minimum	0 (Display: 00-00-00)	Maximum	311299 (Display: 31-12-99)
Default		Units	
Type	32 Bit Power Down Save	Update Rate	Write on trip
Display Format	Date	Decimal Places	0
Coding	RO, ND, NC, PT		

See *Trip 0* (10.020).

Parameter	**10.046 *Trip 2 Time***		
Short description	Shows the time at which trip 2 occurred		
Mode	RFC-A		
Minimum	0 (Display: 00:00:00)	Maximum	235959 (Display: 23:59:59)
Default		Units	
Type	32 Bit Power Down Save	Update Rate	Write on trip
Display Format	Time	Decimal Places	0
Coding	RO, ND, NC, PT		

See *Trip 0* (10.020).

Parameter	**10.047 *Trip 3 Date***		
Short description	Shows the date at which trip 3 occurred		
Mode	RFC-A		
Minimum	0 (Display: 00-00-00)	Maximum	311299 (Display: 31-12-99)
Default		Units	
Type	32 Bit Power Down Save	Update Rate	Write on trip
Display Format	Date	Decimal Places	0
Coding	RO, ND, NC, PT		

See *Trip 0* (10.020).

Parameter	10.048 *Trip 3 Time*		
Short description	Shows the time at which trip 3 occurred		
Mode	RFC-A		
Minimum	0 (Display: 00:00:00)	Maximum	235959 (Display: 23:59:59)
Default		Units	
Type	32 Bit Power Down Save	Update Rate	Write on trip
Display Format	Time	Decimal Places	0
Coding	RO, ND, NC, PT		

See *Trip 0* (10.020).

Parameter	10.049 *Trip 4 Date*		
Short description	Shows the date at which trip 4 occurred		
Mode	RFC-A		
Minimum	0 (Display: 00-00-00)	Maximum	311299 (Display: 31-12-99)
Default		Units	
Type	32 Bit Power Down Save	Update Rate	Write on trip
Display Format	Date	Decimal Places	0
Coding	RO, ND, NC, PT		

See *Trip 0* (10.020).

Parameter	10.050 *Trip 4 Time*		
Short description	Shows the time at which trip 4 occurred		
Mode	RFC-A		
Minimum	0 (Display: 00:00:00)	Maximum	235959 (Display: 23:59:59)
Default		Units	
Type	32 Bit Power Down Save	Update Rate	Write on trip
Display Format	Time	Decimal Places	0
Coding	RO, ND, NC, PT		

See *Trip 0* (10.020).

Parameter	10.051 *Trip 5 Date*		
Short description	Shows the date at which trip 5 occurred		
Mode	RFC-A		
Minimum	0 (Display: 00-00-00)	Maximum	311299 (Display: 31-12-99)
Default		Units	
Type	32 Bit Power Down Save	Update Rate	Write on trip
Display Format	Date	Decimal Places	0
Coding	RO, ND, NC, PT		

See *Trip 0* (10.020).

Parameter	10.052 *Trip 5 Time*		
Short description	Shows the time at which trip 5 occurred		
Mode	RFC-A		
Minimum	0 (Display: 00:00:00)	Maximum	235959 (Display: 23:59:59)
Default		Units	
Type	32 Bit Power Down Save	Update Rate	Write on trip
Display Format	Time	Decimal Places	0
Coding	RO, ND, NC, PT		

See *Trip 0* (10.020).

Parameter	10.053 *Trip 6 Date*		
Short description	Shows the date at which trip 6 occurred		
Mode	RFC-A		
Minimum	0 (Display: 00-00-00)	Maximum	311299 (Display: 31-12-99)
Default		Units	
Type	32 Bit Power Down Save	Update Rate	Write on trip
Display Format	Date	Decimal Places	0
Coding	RO, ND, NC, PT		

See *Trip 0* (10.020).

Parameter	10.054 *Trip 6 Time*		
Short description	Shows the time at which trip 6 occurred		
Mode	RFC-A		
Minimum	0 (Display: 00:00:00)	Maximum	235959 (Display: 23:59:59)
Default		Units	
Type	32 Bit Power Down Save	Update Rate	Write on trip
Display Format	Time	Decimal Places	0
Coding	RO, ND, NC, PT		

See *Trip 0* (10.020).

Parameter	10.055 *Trip 7 Date*		
Short description	Shows the date at which trip 7 occurred		
Mode	RFC-A		
Minimum	0 (Display: 00-00-00)	Maximum	311299 (Display: 31-12-99)
Default		Units	
Type	32 Bit Power Down Save	Update Rate	Write on trip
Display Format	Date	Decimal Places	0
Coding	RO, ND, NC, PT		

See *Trip 0* (10.020).

Parameter	10.056 *Trip 7 Time*		
Short description	Shows the time at which trip 7 occurred		
Mode	RFC-A		
Minimum	0 (Display: 00:00:00)	Maximum	235959 (Display: 23:59:59)
Default		Units	
Type	32 Bit Power Down Save	Update Rate	Write on trip
Display Format	Time	Decimal Places	0
Coding	RO, ND, NC, PT		

See *Trip 0* (10.020).

Parameter	10.057 *Trip 8 Date*		
Short description	Shows the date at which trip 8 occurred		
Mode	RFC-A		
Minimum	0 (Display: 00-00-00)	Maximum	311299 (Display: 31-12-99)
Default		Units	
Type	32 Bit Power Down Save	Update Rate	Write on trip
Display Format	Date	Decimal Places	0
Coding	RO, ND, NC, PT		

See *Trip 0* (10.020).

Parameter	10.058 *Trip 8 Time*		
Short description	Shows the time at which trip 8 occurred		
Mode	RFC-A		
Minimum	0 (Display: 00:00:00)	Maximum	235959 (Display: 23:59:59)
Default		Units	
Type	32 Bit Power Down Save	Update Rate	Write on trip
Display Format	Time	Decimal Places	0
Coding	RO, ND, NC, PT		

See *Trip 0* (10.020).

Parameter	10.059 *Trip 9 Date*		
Short description	Shows the date at which trip 9 occurred		
Mode	RFC-A		
Minimum	0 (Display: 00-00-00)	Maximum	311299 (Display: 31-12-99)
Default		Units	
Type	32 Bit Power Down Save	Update Rate	Write on trip
Display Format	Date	Decimal Places	0
Coding	RO, ND, NC, PT		

See *Trip 0* (10.020).

Parameter	10.060 *Trip 9 Time*		
Short description	Shows the time at which trip 9 occurred		
Mode	RFC-A		
Minimum	0 (Display: 00:00:00)	Maximum	235959 (Display: 23:59:59)
Default		Units	
Type	32 Bit Power Down Save	Update Rate	Write on trip
Display Format	Time	Decimal Places	0
Coding	RO, ND, NC, PT		

See *Trip 0* (10.020).

Parameter	10.061 *Braking Resistor Resistance*		
Short description	Set to the resistance value of the braking resistor		
Mode	RFC-A		
Minimum	0.00	Maximum	10000.00
Default	0.00	Units	Ω
Type	32 Bit User Save	Update Rate	Background read
Display Format	Standard	Decimal Places	2
Coding	RW		

See *Braking Resistor Rated Power* (10.030).

Parameter	10.064 *Remote Keypad Battery Low*		
Short description	Indicates that the real time clock battery in the remote keypad is low		
Mode	RFC-A		
Minimum	0	Maximum	1
Default		Units	
Type	1 Bit Volatile	Update Rate	Background write
Display Format	Standard	Decimal Places	0
Coding	RO, ND, NC, PT		

Remote Keypad Battery Low (10.064) is set to one when a keypad is connected to the drive user comms port with an internal real-time clock and the battery is not fitted or the voltage is below the minimum threshold.

Parameter	10.065 *Auto-tune Active*		
Short description	Indicates that an auto-tune sequence is active		
Mode	RFC-A		
Minimum	0	Maximum	1
Default		Units	
Type	1 Bit Volatile	Update Rate	Background write
Display Format	Standard	Decimal Places	0
Coding	RO, ND, NC, PT		

Auto-tune Active (10.065) is set to one while an auto-tune sequence is active.

Parameter	10.066 *Limit Switch Active*		
Short description	Indicates that a limit switch is enabled and active		
Mode	RFC-A		
Minimum	0	Maximum	1
Default		Units	
Type	1 Bit Volatile	Update Rate	Background write
Display Format	Standard	Decimal Places	0
Coding	RO, ND, NC, PT		

Limit Switch Active (10.066) is set to one when a limit switch is enabled and active.

Parameter	10.068 *Hold Drive Healthy on Under Voltage*		
Short description	Set to hold drive healthy if the drive is in the under voltage state		
Mode	RFC-A		
Minimum	0	Maximum	1
Default	0	Units	
Type	1 Bit User Save	Update Rate	Background read
Display Format	Standard	Decimal Places	0
Coding	RW		

Hold Drive Healthy on Under Voltage (10.068) can be used to hold the drive healthy active (*Drive Healthy* (10.001) = 1 and not flash the status LED on the front of the drive) when the drive is in the under voltage state (*Under Voltage Active* (10.016) = 1).

If *Hold Drive Healthy on Under Voltage* (10.068) = 0 and *Under Voltage Active* (10.016) = 1, then *Drive Healthy* (10.001) will be set to 0 and the status LED on the front of the drive will flash.

If *Hold Drive Healthy on Under Voltage* (10.068) = 1, *Under Voltage Active* (10.016) = 1 and the drive is not tripped (i.e. *Drive Status* (10.101) does not equal 9), then *Drive Healthy* (10.001) will be set to 1 and the status LED on the front of the drive will not flash.

If the drive is tripped then *Drive Healthy* (10.001) will be set to 0 and the status LED will flash independent of what *Hold Drive Healthy on Under Voltage* (10.068) is set to.

Parameter	10.069 *Additional Status Bits*		
Short description	Shows the additional status bits for the drive		
Mode	RFC-A		
Minimum	0 (Display: 000000000000)	Maximum	4095 (Display: 111111111111)
Default		Units	
Type	16 Bit Volatile	Update Rate	Background write
Display Format	Binary	Decimal Places	0
Coding	RO, ND, NC, PT		

The bits in *Additional Status Bits* (10.069) mirror the status bits parameters as shown below. Where the parameters do not exist in any mode the bit remains at zero.

Bit	Status parameter
0	Reserved
1	*Motor Overload Alarm* (10.017)
2	*Drive Over-temperature Alarm* (10.018)
3	*Drive Warning* (10.019)
4	Reserved
5	Reserved
6	*Remote Keypad Battery Low* (10.064)
7	*Auto-tune Active* (10.065)
8	*Limit Switch Active* (10.066)
9	Reserved
10	*Low AC Alarm* (10.107)
11	*Current Limit Active* (10.009)

Because of the limited number of segments on drives with an LED display, these drives will indicate the parameter value as a decimal value rather than a binary value.

Parameter	10.070 *Trip 0 Sub-trip Number*		
Short description	Shows the sub-trip number for trip 0		
Mode	RFC-A		
Minimum	0	Maximum	65535
Default		Units	
Type	16 Bit Power Down Save	Update Rate	Write on trip
Display Format	Standard	Decimal Places	0
Coding	RO, ND, NC, PT, BU		

See *Trip 0* (10.020).

Parameter	10.071 *Trip 1 Sub-trip Number*		
Short description	Shows the sub-trip number for trip 1		
Mode	RFC-A		
Minimum	0	Maximum	65535
Default		Units	
Type	16 Bit Power Down Save	Update Rate	Write on trip
Display Format	Standard	Decimal Places	0
Coding	RO, ND, NC, PT, BU		

See *Trip 0* (10.020).

Parameter	10.072 *Trip 2 Sub-trip Number*		
Short description	Shows the sub-trip number for trip 2		
Mode	RFC-A		
Minimum	0	Maximum	65535
Default		Units	
Type	16 Bit Power Down Save	Update Rate	Write on trip
Display Format	Standard	Decimal Places	0
Coding	RO, ND, NC, PT, BU		

See *Trip 0* (10.020).

Parameter	10.073 *Trip 3 Sub-trip Number*		
Short description	Shows the sub-trip number for trip 3		
Mode	RFC-A		
Minimum	0	Maximum	65535
Default		Units	
Type	16 Bit Power Down Save	Update Rate	Write on trip
Display Format	Standard	Decimal Places	0
Coding	RO, ND, NC, PT, BU		

See *Trip 0* (10.020).

Parameter	10.074 *Trip 4 Sub-trip Number*		
Short description	Shows the sub-trip number for trip 4		
Mode	RFC-A		
Minimum	0	Maximum	65535
Default		Units	
Type	16 Bit Power Down Save	Update Rate	Write on trip
Display Format	Standard	Decimal Places	0
Coding	RO, ND, NC, PT, BU		

See *Trip 0* (10.020).

Parameter	10.075 *Trip 5 Sub-trip Number*		
Short description	Shows the sub-trip number for trip 5		
Mode	RFC-A		
Minimum	0	Maximum	65535
Default		Units	
Type	16 Bit Power Down Save	Update Rate	Write on trip
Display Format	Standard	Decimal Places	0
Coding	RO, ND, NC, PT, BU		

See *Trip 0* (10.020).

Parameter	10.076 *Trip 6 Sub-trip Number*		
Short description	Shows the sub-trip number for trip 6		
Mode	RFC-A		
Minimum	0	Maximum	65535
Default		Units	
Type	16 Bit Power Down Save	Update Rate	Write on trip
Display Format	Standard	Decimal Places	0
Coding	RO, ND, NC, PT, BU		

See *Trip 0* (10.020).

Parameter	10.077 *Trip 7 Sub-trip Number*		
Short description	Shows the sub-trip number for trip 7		
Mode	RFC-A		
Minimum	0	Maximum	65535
Default		Units	
Type	16 Bit Power Down Save	Update Rate	Write on trip
Display Format	Standard	Decimal Places	0
Coding	RO, ND, NC, PT, BU		

See *Trip 0* (10.020).

Parameter	10.078 *Trip 8 Sub-trip Number*		
Short description	Shows the sub-trip number for trip 8		
Mode	RFC-A		
Minimum	0	Maximum	65535
Default		Units	
Type	16 Bit Power Down Save	Update Rate	Write on trip
Display Format	Standard	Decimal Places	0
Coding	RO, ND, NC, PT, BU		

See *Trip 0* (10.020).

Parameter	10.079 *Trip 9 Sub-trip Number*		
Short description	Shows the sub-trip number for trip 9		
Mode	RFC-A		
Minimum	0	Maximum	65535
Default		Units	
Type	16 Bit Power Down Save	Update Rate	Write on trip
Display Format	Standard	Decimal Places	0
Coding	RO, ND, NC, PT, BU		

See *Trip 0* (10.020).

Parameter	10.080 *Stop Motor*		
Short description	Indicates that the motor is being stopped before the drive trips		
Mode	RFC-A		
Minimum	0	Maximum	1
Default		Units	
Type	1 Bit Volatile	Update Rate	Background write
Display Format	Standard	Decimal Places	0
Coding	RO, ND, NC, PT		

It is possible for some trips to cause the motor to stop before the trip is initiated (see *Action On Trip Detection* (10.037)). During the period while the motor is being stopped before the trip is initiated *Stop Motor* (10.080) is set to one. Once the motor stops *Stop Motor* (10.080) is set back to zero.

Parameter	**10.081** ***Phase Loss***		
Short description	Indicates that the drive has detected an input phase loss		
Mode	RFC-A		
Minimum	0	Maximum	1
Default		Units	
Type	1 Bit Volatile	Update Rate	Background write
Display Format	Standard	Decimal Places	0
Coding	RO, ND, NC, PT		

If phase loss or imbalance is detected that would initiate a phase loss trip with sub-trip 0, i.e. *Phase Loss*.000, then *Phase Loss* (10.081) is set to one. Either the motor will be stopped and the drive tripped or the drive will continue to operate normally until the user stops the motor and the drive trips (see *Action On Trip Detection* (10.037)). In either case *Phase Loss* (10.081) is set to one when the phase loss condition is detected and remains set until the drive trips.

Parameter	**10.090** ***Drive Ready***		
Short description	Indicates that the drive is ready and a run command is not active		
Mode	RFC-A		
Minimum	0	Maximum	1
Default		Units	
Type	1 Bit Volatile	Update Rate	Background write
Display Format	Standard	Decimal Places	0
Coding	RO, ND, NC, PT		

Drive Ready (10.090) indicates that the drive is ready and a run command is not active.

Parameter	**10.101** ***Drive Status***		
Short description	Shows the present status of the drive		
Mode	RFC-A		
Minimum	0	Maximum	15
Default		Units	
Type	8 Bit Volatile	Update Rate	Background write
Display Format	Standard	Decimal Places	0
Coding	RO, TE, ND, NC, PT, BU		

Value	***Text***	***Description***
0	Inhibit	Drive is not enabled
1	Ready	Drive is enabled but has not received a Run command
2	Stop	Drive has been stopped, but is still active
4	Run	Drive is running (not seen on LED display on M100 - M300, the frequency is displayed instead)
5	Supply Loss	Supply loss has been detected
6	Deceleration	Drive is decelerating (not seen on LED display on M100 - M300, the frequency is displayed instead)
7	dc Injection	Drive is applying current injection to the motor
9	Trip	Drive has tripped
14	Heat	Current is being applied to the motor to warm it up
15	Under Voltage	Drive is in the Under Voltage state

Drive Status (10.101) shows the present status of the drive. The strings from this parameter are also used by the basic keypad to provide the status display text.

The LED on the front of the drive gives an indication of the drive state as shown in the table below.

Drive state	***Drive Healthy* (10.001)**	***Drive Active* (10.002)**	***Active Alarm* (10.104)**	***Drive Warning* (10.019)**	**LED**
Healthy	1	0	0	0	Continuous
Tripped	0	X	X	X	Flashing: 0.5s on and 0.5s off
HF trip	0	X	X	X	Flashing: 0.25s on and 0.25s off
Standby	1	X	0	0	Flasing: 0.125s on and 0.125s off

X = Don't care

Parameter	**10.102** ***Trip Reset Source***		
Short description	Indicates whether a trip in the trip log has been reset		
Mode	RFC-A		
Minimum	0	Maximum	1023
Default		Units	
Type	16 Bit Power Down Save	Update Rate	Write on trip
Display Format	Standard	Decimal Places	0
Coding	RO, ND, NC, PT, BU		

The bits in *Trip Reset Source* (10.102) correspond to each of the trips in the trip log (i.e. bit 0 corresponds to trip 0, bit 1 corresponds to trip 1, etc.). When a trip occurs, bit 0 is set to one and the other bits corresponding to the trips already in the trip log are shifted left one bit. If the trip is reset then bit 0 is set back to zero, otherwise if a higher priority trip occurs bit 0 is shifted left by one bit. The result is that each of the bits in *Trip Reset Source* (10.102) show whether trips in the trip log were reset or moved up the trip log by a higher priority trip.

Parameter	10.103 *Trip Time Identifier*		
Short description	Shows time in milliseconds since the drive powered up when a trip occurred		
Mode	RFC-A		
Minimum	-2147483648	Maximum	2147483647
Default		Units	ms
Type	32 Bit Volatile	Update Rate	Write on trip
Display Format	Standard	Decimal Places	0
Coding	RO, ND, NC, PT		

When a trip occurs the time in milliseconds since the drive powered up is stored in *Trip Time Identifier* (10.103). The time rolls-over when it reaches 2^{32} - 1, but if the time is 0 a value of 1 is written. *Trip Time Identifier* (10.103) can be used to determine when a new trip has occurred as the value will change (unless there were exactly 2^{32}ms between trips) and will be non-zero.

Parameter	10.104 *Active Alarm*		
Short description	Shows the value of the active alarm		
Mode	RFC-A		
Minimum	0	Maximum	16
Default		Units	
Type	8 Bit Volatile	Update Rate	Background write
Display Format	Standard	Decimal Places	0
Coding	RO, TE, ND, NC, PT, BU		

Value	*Text*	*Description*
0	None	No alarm
1	Brake Resistor	Braking overload
2	Motor Overload	Motor overload
4	Drive Overload	Drive overload
5	Auto Tune	Auto tune in progress
6	Limit Switch	Limit switch active
9	Option Slot 1	Slot 1 alarm
13	Low AC	Low voltage mode
14	Current limit	Current limit active
15	24V Backup Lost	24V backup not present
16	Fan	Fan reversed or failed

If there is no alarm then *Active Alarm* (10.104) = 0. If one alarm is active then *Active Alarm* (10.104) shows the value of the alarm. If more than one alarm is active then *Active Alarm* (10.104) shows the active alarm with the lowest value. The strings from this parameter are also used by the basic keypad to provide the status display text except for option slot warnings where the option module may supply the string.

Parameter	10.106 *Potential Drive Damage Conditions*		
Short description	Indicates that the user has put the drive in a condition that could potentially damage the drive		
Mode	RFC-A		
Minimum	0 (Display: 00)	Maximum	3 (Display: 11)
Default		Units	
Type	8 Bit Power Down Save	Update Rate	Background write
Display Format	Binary	Decimal Places	0
Coding	RO, ND, NC, PT, BU		

The bits in *Potential Drive Damage Conditions* (10.106) are set under the conditions shown in the table below to indicate that the user has put the drive in a condition that could potentially damage the drive. The bits in this parameter cannot be cleared by users.

***Potential Drive Damage Conditions* (10.106)**	**Condition**
0	Reserved
1	If *Cooling Fan control* (06.045) = 0 and the control board gets too hot, the drive trips *OHt Control* and the option module is put in standby.
2	Reserved
3	Reserved

Because of the limited number of segments on drives with an LED display, these drives will indicate the parameter value as a decimal value rather than a binary value.

Parameter	10.107 *Low AC Alarm*		
Short description	Indicates that the low AC alarm is active		
Mode	RFC-A		
Minimum	0	Maximum	1
Default		Units	
Type	1 Bit Volatile	Update Rate	Background write
Display Format	Standard	Decimal Places	0
Coding	RO, ND, NC, PT		

See *Low DC Link Operation* (06.077).

Parameter	**10.108** ***Reversed cooling fan detected***		
Short description	Indicates that the drive cooling fan may be fitted with the air being blown in the wrong direction		
Mode	RFC-A		
Minimum	0	Maximum	1
Default		Units	
Type	1 Bit Volatile	Update Rate	Background write
Display Format	Standard	Decimal Places	0
Coding	RO, ND, NC, PT		

The *Reversed cooling fan detected* (10.108) detected flag is used to indicate that the pattern of IGBT temperatures shows that the cooling fan could be reversed. The fan is user replaceable so should be checked if this flag is set.

Menu 11 Single Line Descriptions − *Miscellaneous*

Mode: RFC-A

Parameter		Range	Default	Type					
11.018	Status Mode Parameter 1	0.000 to 30.999	2.001	RW	Num			PT	US
11.019	Status Mode Parameter 2	0.000 to 30.999	4.020	RW	Num			PT	US
11.020	Reset Serial Communications	Off (0) or On (1)		RW	Bit	ND	NC		
11.021	Customer defined scaling	0.000 to 10.000	1.000	RW	Num				US
11.022	Active Parameter At Power-up	0.000 to 0.095	0.010	RW	Num			PT	US
11.023	Serial Address	1 to 247	1	RW	Num				US
11.024	Serial Mode	8 2 NP (0), 8 1 NP (1), 8 1 EP (2), 8 1 OP (3), 8 2 NP M (4), 8 1 NP M (5), 8 1 EP M (6), 8 1 OP M (7), 7 1 EP (8), 7 1 OP (9)	8 2 NP (0)	RW	Txt				US
11.025	Serial Baud Rate	600 (1), 1200 (2), 2400 (3), 4800 (4), 9600 (5), 19200 (6), 38400 (7), 57600 (8), 76800 (9), 115200 (10) Baud	19200 (6) Baud	RW	Txt				US
11.026	Minimum Comms Transmit Delay	0 to 250 ms	2 ms	RW	Num				US
11.027	Silent Period	0 to 250 ms	0 ms	RW	Num				US
11.028	Drive Derivative	0 to 255		RO	Num	ND	NC	PT	
11.029	Software Version	0 to 99999999		RO	Num	ND	NC	PT	
11.030	User Security Code	0 to 9999		RW	Num	ND		PT	US
11.031	User Drive Mode	Open-loop (1), RFC-A (2)		RW	Txt	ND	NC	PT	
11.032	Maximum Heavy Duty Rating	0.00 to 9999.99 A		RO	Num	ND	NC	PT	
11.033	Drive Rated Voltage	110V (0), 200V (1), 400V (2), 575V (3), 690V (4)		RO	Txt	ND	NC	PT	
11.034	Drive Configuration	AV (0), AI (1), AV Preset (2), AI Preset (3), Preset (4), Keypad (5), Keypad Ref (6), Electronic Pot (7), Torque Control (8), Pid Control (9)	AV (0)	RW	Txt			PT	US
11.035	Power Software Version	0 to 99999999		RO	Num	ND	NC	PT	
11.036	NV Media Card File Previously Loaded	0 to 999	0	RO	Num		NC	PT	
11.037	NV Media Card File Number	0 to 999	0	RW	Num				
11.038	NV Media Card File Type	None (0), Open-loop (1), RFC-A (2), User Program (5)		RO	Txt	ND	NC	PT	
11.039	NV Media Card File Version	0 to 9999		RO	Num	ND	NC	PT	
11.042	Parameter Cloning	None (0), Read (1), Program (2), Auto (3), Boot (4)	None (0)	RW	Txt		NC		US
11.043	Load Defaults	None (0), Standard (1), US (2)	None (0)	RW	Txt		NC		
11.044	User Security Status	Level 1 (0), Level 2 (1), All Menus (2), Status Only (3), No Access (4)		RW	Txt	ND		PT	
11.045	Select Motor 2 Parameters	Motor 1 (0), Motor 2 (1)	Motor 1 (0)	RW	Txt				US
11.046	Defaults Previously Loaded	0 to 2000		RO	Num	ND	NC	PT	US
11.047	Onboard User Program: Enable	Stop (0), Run (1)	Run (1)	RW	Txt				US
11.048	Onboard User Program: Status	-2147483648 to 2147483647		RO	Num	ND	NC	PT	
11.049	Onboard User Program: Programming Events	0 to 65535		RO	Num	ND	NC	PT	
11.050	Onboard User Program: FreewheelingTasks Per Second	0 to 65535		RO	Num	ND	NC	PT	
11.051	Onboard User Program: Clock Task Time Used	0.0 to 100.0 %		RO	Num	ND	NC	PT	
11.052	Serial Number LS	000000 to 999999		RO	Num	ND	NC	PT	
11.053	Serial Number MS	0 to 999999		RO	Num	ND	NC	PT	
11.054	Drive Date Code	0000 to 9999		RO	Num	ND	NC	PT	
11.055	Onboard User Program: Clock Task Schedule Rate	0 to 262128 ms		RO	Num	ND	NC	PT	
11.060	Maximum Rated Current	0.000 to 999.999 A		RO	Num	ND	NC	PT	
11.061	Full Scale Current Kc	0.000 to 999.999 A		RO	Num	ND	NC	PT	
11.063	Product Type	0 to 255		RO	Num	ND	NC	PT	
11.064	Product Identifier Characters	1295265840 to 2147483647		RO	Num	ND	NC	PT	
11.065	Frame size and voltage code	000 to 999		RO	Num	ND	NC	PT	
11.066	Power Stage Identifier	0 to 255		RO	Num	ND	NC	PT	
11.067	Control Board Identifier	0 to 255		RO	Num	ND	NC	PT	
11.068	Drive current rating	00000 to 32767		RO	Num	ND	NC	PT	
11.070	Core Parameter Database Version	0.00 to 99.99		RO	Num	ND	NC	PT	
11.072	NV Media Card Create Special File	0 to 1	0	RW	Num		NC		
11.073	NV Card Type Fitted	None (0), Reserved (1), SD Card (2)		RO	Txt	ND	NC	PT	
11.075	NV Media Card Read-only Flag	Off (0) or On (1)		RO	Bit	ND	NC	PT	
11.076	NV Media Card Warning Suppression Flag	Off (0) or On (1)		RO	Bit	ND	NC	PT	
11.077	NV Media Card File Required Version	0 to 9999		RW	Num	ND	NC	PT	

11.079	Drive Name Characters 1-4	-2147483648 to 2147483647	757935405	RW	Num			PT	US
11.080	Drive Name Characters 5-8	-2147483648 to 2147483647	757935405	RW	Num			PT	US
11.081	Drive Name Characters 9-12	-2147483648 to 2147483647	757935405	RW	Num			PT	US
11.082	Drive Name Characters 13-16	-2147483648 to 2147483647	757935405	RW	Num			PT	US
11.084	Drive Mode	Open-loop (1), RFC-A (2)		RO	Txt	ND	NC	PT	US
11.085	Security Status	None (0), Read-only (1), Status-only (2), No Access (3)		RO	Txt	ND	NC	PT	PS
11.086	Menu Access Status	Menu 0 Level 1 (0), Menu 0 (1), All Menus (2)		RO	Txt	ND	NC	PT	PS
11.090	Keypad Port Serial Address	1 to 16	1	RW	Num				US
11.091	Additional Identifier Characters 1	-2147483648 to 2147483647		RO	Num	ND	NC	PT	
11.092	Additional Identifier Characters 2	-2147483648 to 2147483647		RO	Num	ND	NC	PT	
11.093	Additional Identifier Characters 3	-2147483648 to 2147483647		RO	Num	ND	NC	PT	
11.097	AI ID Code	None (0), SD Card (1), RS-485 (2), Reserved (3), Reserved (4), RS-485 + Backup (5)		RO	Txt	ND	NC	PT	
11.098	24V Loss Alarm Enable	Off (0) or On (1)	Off (0)	RW	Bit				US
11.099	Modbus Parameter Conversion	0000 to 1111	0000	RW	Bin				US

RW	Read / Write	RO	Read-only	Bit	Bit parameter	Txt	Text string	Date	Date parameter	Time	Time parameter
Chr	Character parameter	Bin	Binary parameter	IP	IP address	Mac	MAC address	Ver	Version number	SMP	Slot, menu, parameter
Num	Number parameter	DE	Destination	ND	No default value	RA	Rating dependent	NC	Non-copyable	PT	Protected
FI	Filtered	US	User save	PS	Power-down save						

Menu 11 − *Miscellaneous*

Mode: RFC-A

Parameter	11.018 *Status Mode Parameter 1*		
Short description	Defines the parameter displayed on the upper row of the keypad when in status mode		
Mode	RFC-A		
Minimum	0.000	Maximum	30.999
Default	2.001	Units	
Type	16 Bit User Save	Update Rate	Background read
Display Format	Standard	Decimal Places	3
Coding	RW, PT, BU		

Status Mode Parameter 1 (11.018) and *Status Mode Parameter 2* (11.019) defines which parameters are displayed in Status mode.

If one of the two Status parameter does not exist or is 0.000, only one Status parameter is displayed.

If the two Status parameters do not exist or are 0.000, the active parameter is displayed.

Parameter	11.019 *Status Mode Parameter 2*		
Short description	Defines the parameter displayed on the lower row of the keypad when in status mode		
Mode	RFC-A		
Minimum	0.000	Maximum	30.999
Default	4.020	Units	
Type	16 Bit User Save	Update Rate	Background read
Display Format	Standard	Decimal Places	3
Coding	RW, PT, BU		

See *Status Mode Parameter 1* (11.018).

Parameter	11.020 *Reset Serial Communications*		
Short description	Set to one to update communications set-up		
Mode	RFC-A		
Minimum	0	Maximum	1
Default		Units	
Type	1 Bit Volatile	Update Rate	Background read
Display Format	Standard	Decimal Places	0
Coding	RW, ND, NC		

When *Serial Address* (11.023), *Serial Mode* (11.024), *Serial Baud Rate* (11.025), *Minimum Comms Transmit Delay* (11.026) or *Silent Period* (11.027) are modified the changes do not have an immediate effect on the serial communications system. The new values are used after the next power-up or if *Reset Serial Communications* (11.020) is set to one. *Reset Serial Communications* (11.020) is automatically cleared to zero after the communications system is updated.

Parameter	11.021 *Customer defined scaling*		
Short description	Defines the scaling of 11.018 in status view		
Mode	RFC-A		
Minimum	0.000	Maximum	10.000
Default	1.000	Units	
Type	16 Bit User Save	Update Rate	Background read
Display Format	Standard	Decimal Places	3
Coding	RW		

Customer defined scaling (11.021) defines the scaling applied to *Status Mode Parameter 1* (11.018). The scaling is only applied in the Status mode.

Parameter	11.022 *Active Parameter At Power-up*		
Short description	Defines which parameter is displayed at power-up in view mode		
Mode	RFC-A		
Minimum	0.000	Maximum	0.095
Default	0.010	Units	
Type	8 Bit User Save	Update Rate	Background read
Display Format	Standard	Decimal Places	3
Coding	RW, PT, BU		

Active Parameter At Power-up (11.022) defines which Menu 0 parameter is initially active at power-up in view mode. If *Active Parameter At Power-up* (11.022) > 10 and *User Security Status* (11.044) is set to *Level 1* then Parameter 10 is set as the power up parameter.

See *Status Mode Parameter 1* (11.018).

Parameter	11.023 *Serial Address*		
Short description	Defines the serial address of the drive		
Mode	RFC-A		
Minimum	1	Maximum	247
Default	1	Units	
Type	8 Bit User Save	Update Rate	Read on serial communications reset
Display Format	Standard	Decimal Places	0
Coding	RW, BU		

Serial Address (11.023) defines the node address for the serial comms interface in the range from 1 to 247.

Serial Address (11.023) to *Silent Period* (11.027) can be used to change the configuration of the drive RS485 serial interface if present on the AI adapter.

Changing the parameters does not immediately change the serial communications settings. See *Reset Serial Communications* (11.020) for more details.

Parameter	11.024 *Serial Mode*		
Short description	Defines the serial mode of the drive		
Mode	RFC-A		
Minimum	0	Maximum	9
Default	0	Units	
Type	8 Bit User Save	Update Rate	Read on serial communications reset
Display Format	Standard	Decimal Places	0
Coding	RW, TE		

Value	*Text*
0	8 2 NP
1	8 1 NP
2	8 1 EP
3	8 1 OP
4	8 2 NP M
5	8 1 NP M
6	8 1 EP M
7	8 1 OP M
8	7 1 EP
9	7 1 OP

The core drive always uses the Modbus rtu protocol and is always a slave. *Serial Mode* (11.024) defines the data format used by the serial comms interface. The bits in the value of *Serial Mode* (11.024) define the data format as follows. Bit 3 should always be 0 as 8 data bits are required for Modbus rtu.

Bits	3	2
Format	Number of data bits 0 = 8 bits 1 = 7 bits	Register mode 0 = Standard 1 = Modified

Bit 2 selects either standard or modified register mode. The menu and parameter numbers are derived for each mode as given in the table below. Standard mode is compatible with Commander SK. Modified mode is provided to allow parameter numbers up to 255 to be addressed. If any menus contain more than 99 parameters, then these parameters cannot be accessed via Standard Modbus rtu.

Register mode	Register address
Standard	(mm x 100) + ppp - 1 where mm ≤ 162 and ppp ≤ 99
Modified	(mm x 256) + ppp - 1 where mm ≤ 63 and ppp ≤ 255

Changing the parameters does not immediately change the serial communications settings. See *Reset Serial Communications* (11.020) for more details.

Parameter	11.025 *Serial Baud Rate*		
Short description	Defines the serial baud rate of the drive		
Mode	RFC-A		
Minimum	1	Maximum	10
Default	6	Units	Baud
Type	8 Bit User Save	Update Rate	Read on serial communications reset
Display Format	Standard	Decimal Places	0
Coding	RW, TE		

Value	*Text*
1	600
2	1200
3	2400
4	4800
5	9600
6	19200
7	38400
8	57600
9	76800
10	115200

Serial Baud Rate (11.025) defines the baud rate used by the serial comms interface.

Changing the parameters does not immediately change the serial communications settings. See *Reset Serial Communications* (11.020) for more details.

Parameter	**11.026** ***Minimum Comms Transmit Delay***		
Short description	Defines the minimum delay between the host and drive		
Mode	RFC-A		
Minimum	0	Maximum	250
Default	2	Units	ms
Type	8 Bit User Save	Update Rate	Read on serial communications reset
Display Format	Standard	Decimal Places	0
Coding	RW, BU		

There will always be a finite delay between the end of a message from the host (master) and the time at which the host is ready to receive the response from the drive (slave). The drive does not respond until at least 1ms after the message has been received from the host allowing 1ms for the host to change from transmit to receive mode. This initial delay can be extended using *Minimum Comms Transmit Delay* (11.026) if required.

Minimum Comms Transmit Delay **(11.026)**	**Action**
0	The transmitters are turned on and data transmission begins immediately after the initial delay (≥1ms)
1	The transmitters are turned on after the initial delay (≥1ms) and data transmission begins 1ms later
2 or more	The transmitters are turned on after a delay of at least the time specified by *Minimum Comms Transmit Delay* (11.026) and data transmission begins 1ms later

The drive holds its own transmitters active for up to 1ms after it has transmitted data before switching to the receive mode; the host should not send any data during this time.

Changing the parameters does not immediately change the serial communications settings. See *Reset Serial Communications* (11.020) for more details.

Parameter	**11.027** ***Silent Period***		
Short description	Defines the idle time required to detect the end of a received data message		
Mode	RFC-A		
Minimum	0	Maximum	250
Default	0	Units	ms
Type	8 Bit User Save	Update Rate	Read on serial communications reset
Display Format	Standard	Decimal Places	0
Coding	RW, BU		

The silent period defines the idle time required to detect the end of a received data message. If *Silent Period* (11.027) = 0 then the silent period is at least 3.5 characters at the selected baud rate. This is the standard silent period for Modbus rtu. If *Silent Period* (11.027) is non-zero it defines the minimum silent period in milliseconds.

Changing the parameters does not immediately change the serial communications settings. See *Reset Serial Communications* (11.020) for more details.

Parameter	**11.028** ***Drive Derivative***		
Short description	Displays the drive derivative identifier		
Mode	RFC-A		
Minimum	0	Maximum	255
Default		Units	
Type	8 Bit Volatile	Update Rate	Power-up write
Display Format	Standard	Decimal Places	0
Coding	RO, ND, NC, PT, BU		

A drive can be made into a derivative drive by adding a derivative customisation image. The derivative software should specify a derivative identifier which is put into *Drive Derivative* (11.028) at power-up. Each derivative should have a unique identifier.

Parameter	**11.029 *Software Version***		
Short description	Displays the software version in the drive		
Mode	RFC-A		
Minimum	0	Maximum	99999999
Default		Units	
Type	32 Bit Volatile	Update Rate	Power-up write
Display Format	Version	Decimal Places	0
Coding	RO, ND, NC, PT		

Software Version (11.029) displays the drive control board software version number in the form ww.xx.yy.

Parameter	**11.030 *User Security Code***		
Short description	Defines the user security code of the drive		
Mode	RFC-A		
Minimum	0	Maximum	9999
Default		Units	
Type	32 Bit User Save	Update Rate	Background read
Display Format	Standard	Decimal Places	0
Coding	RW, ND, PT		

Defines the user security code of the drive. This parameter should be set to a value other than 0 to prevent unauthorised access to the drive. When a value has been set, it cannot be seen to prevent the security code from being read (a value of 0 is displayed). If a value has been set, the security code must be entered before any parameter can be adjusted via the keypad, but see also *User Security Status* (11.044).

Parameter	**11.031 *User Drive Mode***		
Short description	Defines the mode of the drive		
Mode	RFC-A		
Minimum	1	Maximum	2
Default		Units	
Type	8 Bit Volatile	Update Rate	Background read
Display Format	Standard	Decimal Places	0
Coding	RW, TE, ND, NC, PT		

Value	***Text***
1	Open-loop
2	RFC-A

Select the drive mode on drive reset. The drive must be inactive (*Drive Active* (10.002) = 0) to take effect.

This parameter will change *Drive Mode* (11.084) to the active mode.

Parameter	**11.032 *Maximum Heavy Duty Rating***		
Short description	Displays the maximum heavy duty current rating of the drive		
Mode	RFC-A		
Minimum	0.00	Maximum	9999.99
Default		Units	A
Type	32 Bit Volatile	Update Rate	Power-up write
Display Format	Standard	Decimal Places	2
Coding	RO, ND, NC, PT		

Maximum Heavy Duty Rating (11.032) defines the maximum setting for *Motor Rated Current* that gives heavy duty operation. If *Maximum Heavy Duty Rating* (11.032) = *Maximum Rated Current* (11.060) then normal duty operation is not possible.

Parameter	**11.033 *Drive Rated Voltage***		
Short description	Displays the voltage rating of the drive		
Mode	RFC-A		
Minimum	0	Maximum	4
Default		Units	
Type	8 Bit Volatile	Update Rate	Power-up write
Display Format	Standard	Decimal Places	0
Coding	RO, TE, ND, NC, PT		

Value	*Text*
0	110V
1	200V
2	400V
3	575V
4	690V

Drive Rated Voltage (11.033) shows the input voltage rating of the drive.

Parameter	**11.034** ***Drive Configuration***		
Short description	Defines the configuration of the drive		
Mode	RFC-A		
Minimum	0	Maximum	9
Default	0	Units	
Type	8 Bit User Save	Update Rate	Actioned on exit of edit mode and on drive reset
Display Format	Standard	Decimal Places	0
Coding	RW, TE, PT, BU		

Value	*Text*	*Description*
0	AV	Analog input 1 (voltage) Analog input 2 (voltage) selected by terminal (Local/Remote)
1	AI	Analog input 1 (current) or Analog input 2 (voltage) selected by terminal (Local/Remote)
2	AV Preset	Analog input 1 (voltage) or 3 presets selected by terminal
3	AI Preset	Analog input 1 (current) or 3 presets selected by terminal
4	Preset	Four presets selected by terminal
5	Keypad	Keypad reference
6	Keypad Ref	Keypad reference with terminal control
7	Electronic Pot	Electronic Potentiometer
8	Torque Control	Torque mode, Analog input 1 (current frequency reference) or Analog input 2 (voltage torque reference) selected by terminal
9	Pid Control	PID mode, Analog input 1 (current feedback source) and Analog input 2 (voltage reference source)

This parameter is used to automatically setup the user programmable area in the level 3 parameter set according to drive configurations. Other default values may also be changed by drive configuration. Parameters are stored in EEPROM automatically following a configuration change if the change is made by a keypad.

Action will only occur if the drive is inactive, not in UU state and no User Actions are running. Otherwise, the parameter will return to its pre altered value on exit from edit mode.

Parameter number	**AV**	**AI**	**AV.Pr**	**AI.Pr**	**Preset**	**Pad**	**Pad.ref**	**E.Pot**	**Tor**	**PID**
Reference Selector (01.014)	0	0	1	1	3	4	6	3	0	1
Analog Input 1 Mode (07.007)	6	4	6	4	6	6	6	6	4	4
Analog Input 2 Mode (07.011)	6	6	7	7	7	6	6	7	6	6
Analog Input 1 Control (07.051)	0	0	0	0	0	0	0	0	0	0
Analog Input 1 Destination A (07.010)	1.036	1.036	1.036	1.036	1.036	1.036	1.036	1.036	1.036	0.000
Analog Input 2 Destination A (07.014)	1.037	1.037	1.046	1.046	1.046	1.037	1.037	9.027	4.008	0.000
Digital Input 05 Destination A (08.025)	1.041	1.041	1.045	1.045	1.045	1.041	1.041	9.026	4.011	14.008
DI5 Control (08.085)	0	0	0	0	0	0	0	0	0	0
Motorised Pot Destination (09.025)	0	0	0	0	0	0	0	1.021	0	0
PID1 Reference Source (14.003)	0	0	0	0	0	0	0	0	0	7.0021
PID1 Feedback Source (14.004)	0	0	0	0	0	0	0	0	0	7.001
PID1 Destination (14.016)	0	0	0	0	0	0	0	0	0	1.036

Parameter	**11.035** ***Power Software Version***		
Short description	Displays the power processor firmware		
Mode	RFC-A		
Minimum	0	Maximum	99999999
Default		Units	
Type	32 Bit Volatile	Update Rate	Power-up write
Display Format	Version	Decimal Places	0
Coding	RO, ND, NC, PT		

Power Software Version (11.035) displays the drive power stage software version number in the form ww.xx.yy.

Parameter	11.036 *NV Media Card File Previously Loaded*		
Short description	Displays the number of the last parameter file transferred from an NV Media Card to the drive		
Mode	RFC-A		
Minimum	0	Maximum	999
Default	0	Units	
Type	16 Bit Volatile	Update Rate	Background write
Display Format	Standard	Decimal Places	0
Coding	RO, NC, PT		

NV Media Card File Previously Loaded (11.036) shows the number of the last parameter file transferred from an NV Media Card to the drive. If defaults are subsequently reloaded *NV Media Card File Previously Loaded* (11.036) is set to 0.

Parameter	11.037 *NV Media Card File Number*		
Short description	Selects a file by its file identification number		
Mode	RFC-A		
Minimum	0	Maximum	999
Default	0	Units	
Type	16 Bit Volatile	Update Rate	Background read
Display Format	Standard	Decimal Places	0
Coding	RW		

NV Media Card File Number (11.037) is used to select a file by its file identification number and can only be changed to values that correspond to files that are recognised by the drive on the NV media card or a value of 0. When *NV Media Card File Number* (11.037) corresponds to the number of a file the following data about the file is shown.

Parameter
NV Media Card File Type (11.038)
NV Media Card File Version (11.039)

The actions of erasing a card, erasing a file, creating a new file, changing a Menu 0 parameter or removing a card resets *NV Media Card File Number* (11.037) to 0.

Parameter	11.038 *NV Media Card File Type*		
Short description	Displays the file type of the file selected		
Mode	RFC-A		
Minimum	0	Maximum	5
Default		Units	
Type	8 Bit Volatile	Update Rate	Background write
Display Format	Standard	Decimal Places	0
Coding	RO, TE, ND, NC, PT		

Value	*Text*
0	None
1	Open-loop
2	RFC-A
5	User Program

NV Media Card File Type (11.038) shows the file type of the file selected with *NV Media Card File Number* (11.037) as shown in the table below.

NV Media Card File Type (11.038)	File
0	No file selected
1	Open-loop mode parameter file
2	RFC-A mode parameter file
3	Reserved
4	Reserved
5	Onboard user program file

Parameter	11.039 *NV Media Card File Version*		
Short description	Displays the version number stored with the file selected		
Mode	RFC-A		
Minimum	0	Maximum	9999
Default		Units	
Type	16 Bit Volatile	Update Rate	Background write
Display Format	Standard	Decimal Places	0
Coding	RO, ND, NC, PT		

NV Media Card File Version (11.039) shows the version number stored with the file selected with *NV Media Card File Number* (11.037).

Parameter	11.042 *Parameter Cloning*		
Short description	Defines the behaviour of cloning to an NV media card		
Mode	RFC-A		
Minimum	0	Maximum	4
Default	0	Units	
Type	8 Bit User Save	Update Rate	Background write
Display Format	Standard	Decimal Places	0
Coding	RW, TE, NC		

Value	*Text*
0	None
1	Read
2	Program
3	Auto
4	Boot

Parameter Cloning (11.042) can also be used to initiate data transfer to or from an NV media card as described below for each possible value of this parameter.

1: Read
Providing a parameter file with file identification number 1 exists on the NV media card, then setting *Parameter Cloning* (11.042) = 1 and initiating a drive reset will transfer the parameter data to the drive (i.e. the same action as writing 6001 to Parameter mm.000 (mm.000)). When the action is complete *Parameter Cloning* (11.042) is automatically reset to zero.

2: Program
Setting *Parameter Cloning* (11.042) = 2 and initiating a drive reset will transfer the parameter data from the drive to a parameter file with file identification number 1. This is the same action as writing 4001 to Parameter mm.000 (mm.000) except that the file will be overwritten if it already exists. When the action is complete *Parameter Cloning* (11.042) is automatically reset to zero.

3: Auto
Setting *Parameter Cloning* (11.042) = 3 and initiating a drive reset will transfer the parameter data from the drive to a parameter file with file identification number 1. This is the same action as writing 4001 to Parameter mm.000 (mm.000) except that the file will be overwritten if it already exists. When the action is complete *Parameter Cloning* (11.042) remains at 3.

If the card is removed when *Parameter Cloning* (11.042) = 3, then *Parameter Cloning* (11.042) is set to 0, which forces the user to change *Parameter Cloning* (11.042) back to 3 if auto mode is still required. The user will need to set *Parameter Cloning* (11.042) = 3 and initiate a drive reset to write the complete parameter set to the new card.

When a parameter in Menu zero is changed via the keypad and *Parameter Cloning* (11.042) = 3 the parameter is saved both to the drive non-volatile memory and to the parameter file with identification number 1 on the card. Only the new value of the modified parameter, and not the value of all the other drive parameters, is stored each time. If *Parameter Cloning* (11.042) is not cleared automatically when a card is removed, then when a new card is inserted that contains a parameter file with identification number 1 the modified parameter would be written to the existing file on the new card and the rest of the parameters in this file may not be the same as those in the drive.

When *Parameter Cloning* (11.042) = 3 and the drive parameters are saved to non-volatile memory, the file on the card is also updated, therefore this file becomes a copy of the drive parameters. At power up, if *Parameter Cloning* (11.042) = 3, the drive will save its complete parameter set to the card. This is done to ensure that if a card is inserted whilst the drive is powered down the new card will have the correct data after the drive is powered up again.

4: Boot
When *Parameter Cloning* (11.042) = 4 the drive operates in the same way as with *Parameter Cloning* (11.042) = 3 and automatically creates a copy of it parameters on the NV Media card. The NC (not clonable) attribute for *Parameter Cloning* (11.042) is 1, and so it does not have a value stored in the parameter file on the card in the normal way. However, the value of *Parameter Cloning* (11.042) is held in the parameter file header. If *Parameter Cloning* (11.042) = 4 in the parameter file with a file identification value of 1 on an NV media card fitted to a drive at power-up then the following actions are taken:

1. The parameters from the parameter file with file identification number 1 are transferred to the drive and then saved in non-volatile memory.
2. If an onboard user program file with file identification number 2 exists then the onboard user program from this file is transferred to the drive.
3. *Parameter Cloning* (11.042) is set to 0 after the data transfer is complete.

It is possible to create a bootable parameter file by setting Parameter mm.000 (mm.000) = 2001 and initiating a drive reset. This file is created in one operation and is not updated when further parameter changes are made.

When the drive is powered up it detects which option modules are fitted before loading parameters from an NV media card which has been set up for boot mode. If a new option module has been fitted since the last time the drive was powered up, a *Slot1 Different* trip is initiated and then the parameters are transferred from the card. If the parameter file includes the parameters for the newly fitted option module then these are also transferred to the drive and the *Slot1 Different* trip is reset. If the parameter file does not include the parameters for the newly fitted option module then the drive does not reset the *Slot1 Different* trip. Once the transfer is complete the drive parameters are saved to non-volatile memory. The trip can be reset either by initiating a drive reset or by powering down and then powering up again.

Parameter	11.043 *Load Defaults*		
Short description	Defines which defaults are to be loaded into the drive		
Mode	RFC-A		
Minimum	0	Maximum	2
Default	0	Units	
Type	8 Bit Volatile	Update Rate	Exit from edit of menus 0 or a drive reset.
Display Format	Standard	Decimal Places	0
Coding	RW, TE, NC		

Value	*Text*
0	None
1	Standard
2	US

If *Load Defaults* (11.043) is non-zero and a drive reset (or exit from edit in menu 0) is initiated then the drive will load and save default parameters. If *Load Defaults* (11.043) = 1 then standard defaults are loaded and if *Load Defaults* (11.043) = 2 then US defaults are loaded. This parameter has priority over actions defined by *Parameter mm.000* (mm.000) and *Parameter Cloning* (11.042). If *Load Defaults* (11.043) is used to initiate loading defaults then it is cleared along with Parameter mm.00 and *Parameter Cloning* (11.042) when the action is completed.

Parameter	**11.044** ***User Security Status***		
Short description	Defines the security level within the drive		
Mode	RFC-A		
Minimum	0	Maximum	4
Default		Units	
Type	8 Bit Volatile	Update Rate	Background read
Display Format	Standard	Decimal Places	0
Coding	RW, TE, ND, PT		

Value	*Text*
0	Level 1
1	Level 2
2	All Menus
3	Status Only
4	No Access

Security

The drive provides a number of different access levels that can be set by the user via *User Security Status* (11.044) ; these are shown in the table below.

Security Level	**Description**	*User Security Status* (11.044)
Level 1	Only the first 10 parameters in Menu 0 are visible and available to be edited.	0
Level 2	All parameters in Menu 0 are visible and available for editing	1
All Menus	Parameters in all Menu's are visible and available for editing.	2
Status Only	The keypad remains in status mode and no parameters can be viewed or edited	4
No Access	The keypad remains in status mode and no parameters can be viewed or edited. Drive parameters cannot be accessed via a comms/fieldbus interface in the drive or any option module.	5

In addition to these access levels, a security code can be used to provide further restriction. When a security code has been set up the drive can either be in the locked or unlocked state. In the locked state the access level that has been set up applies and the security code will need to be entered to change the access level or edit any parameters in the current access level. In the unlocked state the access level can be changed and parameters edited, but when the drive is powered down and powered up again the drive will be in the locked state. The drive may be relocked without powering down by selecting the required security level in Parameter 10 and pressing Enter.

Security can be set up as follows:

1. The *User Security Code* (11.030) should be set to the desired security unlock code (not zero).
2. Select the required access level in Parameter 10 and press enter.
3. The desired access level is automatically saved and retained after power down, the keypad state changes to status mode and security is locked if it has been setup. The access level that is saved is shown in *Security Status* (11.085)

When security is set up and locked:

1. Parameter access is restricted as shown in the table above.
2. *User Security Code* (11.030) reads as zero except in parameter edit mode. Therefore it is not possible to read the value of the security code when security is active and locked.

Security can be unlocked as follows:

1. Any attempt to change access level using Parameter 10 or edit any read/write parameter causes "Security code" to be displayed on the first row of the display. When the Up or Down keys are pressed the second row shows the code being adjusted. On setting the code the user presses the Enter key. If the correct code has been entered then the drive switches to Parameter edit mode on the parameter the user selected to edit, but if the correct code has not been entered the notification "Incorrect security code" is displayed for 2s and the drive returns to Parameter view mode.
2. If Status only or No access has been set and locked then any attempt to leave status mode causes the security code to be requested as per the process described above. The security code entered must be correct for the keypad state machine to switch to the Parameter view mode. It is then possible to access all parameters normally.

Security can be cleared as follows:

1. Security must be unlocked.
2. The *User Security Code* (11.030) should be set to zero. For security to remain cleared after power down then a parameter save should be performed or Parameter 10 should be set to the required access level as with setting security.

It should be noted that *User Security Status* (11.044) is a volatile parameter and that the actual state of the security system is stored in *Security Status* (11.085) and *Menu Access Status* (11.086), which are both power-down save parameters. Therefore the security status will be stored when the drive goes into the under-voltage state. If the drive is already in the under-voltage state the security state should be saved by writing 1001 to *Parameter mm.000* (mm.000) and initiating a reset.

Parameter	**11.045** ***Select Motor 2 Parameters***		
Short description	Set to 1 to select motor 2 parameters		
Mode	RFC-A		
Minimum	0	Maximum	1
Default	0	Units	
Type	8 Bit User Save	Update Rate	Background read
Display Format	Standard	Decimal Places	0
Coding	RW, TE		

Value	***Text***
0	Motor 1
1	Motor 2

Select Motor 2 Parameters (11.045) is used to select the motor map 2 parameters from Menu 21 instead of the standard motor parameters. If *Select Motor 2 Parameters* (11.045) is modified when *Drive Active* (10.002) = 1 the change only becomes effective when *Drive Active* (10.002) = 0. When *Select Motor 2 Parameters* (11.045) = 1 the results from auto-tuning are written to the motor map 2 parameters in Menu 21 instead of to the standard parameters. Each time *Select Motor 2 Parameters* (11.045) is changed *Motor Protection Accumulator* (04.019) is reset to zero. *Motor 2 Active* (21.015) shows the motor map that is active.

Parameter	**11.046** ***Defaults Previously Loaded***		
Short description	Displays the defaults previously loaded in the drive		
Mode	RFC-A		
Minimum	0	Maximum	2000
Default		Units	
Type	16 Bit User Save	Update Rate	Background write
Display Format	Standard	Decimal Places	0
Coding	RO, ND, NC, PT		

Defaults Previously Loaded (11.046) shows the value used to load the previously loaded defaults (i.e. 1233 for standard defaults, or 1244 for US defaults).

Parameter	**11.047** ***Onboard User Program: Enable***		
Short description	Enables the onboard user program		
Mode	RFC-A		
Minimum	0	Maximum	1
Default	1	Units	
Type	8 Bit User Save	Update Rate	Background read
Display Format	Standard	Decimal Places	0
Coding	RW, TE		

Value	***Text***
0	Stop
1	Run

Onboard user programming provides a background task that loops continuously and a timed task that is executed each time at a defined rate.

Onboard User Program: Enable (11.047) allows the onboard user program to be stopped and started.

0: Stop
The onboard user program is stopped.

1: Run
The onboard user program will execute. Background tasks start from the beginning.

Parameter	**11.048** ***Onboard User Program: Status***		
Short description	Displays the status of the onboard user program		
Mode	RFC-A		
Minimum	-2147483648	Maximum	2147483647
Default		Units	
Type	32 Bit Volatile	Update Rate	Background write
Display Format	Standard	Decimal Places	0
Coding	RO, ND, NC, PT		

Onboard User Program: Status (11.048) shows the status of the onboard user program. The value written to this parameter is from the user program itself.

0: Stopped
Indicates that a valid user program is present, but not currently running.

1: Running
Indicates that a valid user program is present and running.

3: Not present
Indicates that no user program is present.

Parameter	11.049 *Onboard User Program: Programming Events*		
Short description	Displays the number of programming events of the onboard user program		
Mode	RFC-A		
Minimum	0	Maximum	65535
Default		Units	
Type	16 Bit Volatile	Update Rate	Background write
Display Format	Standard	Decimal Places	0
Coding	RO, ND, NC, PT, BU		

Onboard User Program: Programming Events (11.049) = 0 when the drive is manufactured and is incremented each time an onboard user program image is written to the drive. If an onboard user program image is written more than 65535 times *Onboard User Program: Programming Events* (11.049) = 65535. *Onboard User Program: Programming Events* (11.049) shows how many times the flash memory within the drive has been reprogrammed.

Parameter	11.050 *Onboard User Program: FreewheelingTasks Per Second*		
Short description	Displays the rate of freewheeling tasks of the onboard user program		
Mode	RFC-A		
Minimum	0	Maximum	65535
Default		Units	
Type	16 Bit Volatile	Update Rate	Background write
Display Format	Standard	Decimal Places	0
Coding	RO, ND, NC, PT, BU		

During each scan in a background task it is possible to give an indication to the drive that the scan loop is starting. If this indication is given then *Onboard User Program: FreewheelingTasks Per Second* (11.050) will give the number of times this indication is given per second.

Parameter	11.051 *Onboard User Program: Clock Task Time Used*		
Short description	Displays the percentage of the available time used by the onboard user program clock task		
Mode	RFC-A		
Minimum	0.0	Maximum	100.0
Default		Units	%
Type	16 Bit Volatile	Update Rate	Background write
Display Format	Standard	Decimal Places	1
Coding	RO, ND, NC, PT		

Onboard User Program: Clock Task Time Used (11.051) shows the percentage of the available time used by the onboard user program timed task.

Parameter	11.052 *Serial Number LS*		
Short description	Shows the least significant 9 decimal digits of the drive serial number		
Mode	RFC-A		
Minimum	0 (Display: 000000)	Maximum	999999 (Display: 999999)
Default		Units	
Type	32 Bit Volatile	Update Rate	Power-up write
Display Format	Lead Zero Pad	Decimal Places	0
Coding	RO, ND, NC, PT		

The drive serial number is available as a pair of 32 bit values where *Serial Number LS* (11.052) provides the least significant 6 decimal digits and *Serial Number MS* (11.053) provides the most significant 4 decimal digits. The reconstructed serial number is ((*Serial Number MS* (11.053) x 1000000) + *Serial Number LS* (11.052)).

Example 1
Serial number "1234567890" would be stored as 11.053 = 1234, 11.052 = 567890.

Example 2
Serial number "1234000056" would be stored as 11.053 = 1234, 11.052 = 56. *Serial Number LS* (11.052) will be shown on the keypad as 000056 (i.e. including the leading zeros).

Parameter	11.053 *Serial Number MS*		
Short description	Shows the most significant 9 decimal digits of the drive serial number		
Mode	RFC-A		
Minimum	0	Maximum	999999
Default		Units	
Type	32 Bit Volatile	Update Rate	Power-up write
Display Format	Standard	Decimal Places	0
Coding	RO, ND, NC, PT		

See *Serial Number LS* (11.052).

Parameter	11.054 *Drive Date Code*		
Short description	Shows the drive date code		
Mode	RFC-A		
Minimum	0 (Display: 0000)	Maximum	9999 (Display: 9999)
Default		Units	
Type	16 Bit Volatile	Update Rate	Background write
Display Format	Lead Zero Pad	Decimal Places	0
Coding	RO, ND, NC, PT, BU		

Drive Date Code (11.054) is a four-digit number in the form yyww where yy is the year and ww is the week.

Parameter	11.055 *Onboard User Program: Clock Task Schedule Rate*		
Short description	Displays the interval at which the clock task is scheduled in ms		
Mode	RFC-A		
Minimum	0	Maximum	262128
Default		Units	ms
Type	32 Bit Volatile	Update Rate	Background write
Display Format	Standard	Decimal Places	0
Coding	RO, ND, NC, PT		

Onboard User Program: Clock Task Schedule Rate (11.055) shows the rate at which the timed task is scheduled in ms.

Parameter	11.060 *Maximum Rated Current*		
Short description	Displays the maximum rated current or normal duty rating of the drive		
Mode	RFC-A		
Minimum	0.000	Maximum	999.999
Default		Units	A
Type	32 Bit Volatile	Update Rate	Power-up write
Display Format	Standard	Decimal Places	3
Coding	RO, ND, NC, PT		

Maximum Rated Current (11.060) defines the variable maximum VM_RATED_CURRENT[MAX] which in turn limits the maximum *Motor Rated Current* (05.007). Therefore Maximum *Maximum Rated Current* (11.060) is the maximum rated current for normal duty operation (if normal duty operation is allowed); or the maximum continuous rating of the drive.

Parameter	11.061 *Full Scale Current Kc*		
Short description	Displays the full scale current Kc		
Mode	RFC-A		
Minimum	0.000	Maximum	999.999
Default		Units	A
Type	32 Bit Volatile	Update Rate	Power-up write
Display Format	Standard	Decimal Places	3
Coding	RO, ND, NC, PT		

Full Scale Current Kc (11.061) shows the full scale current in r.m.s. Amps. If the drive current exceeds this level it will cause an over-current trip.

Parameter	11.063 *Product Type*		
Short description	Displays the core product type		
Mode	RFC-A		
Minimum	0	Maximum	255
Default		Units	
Type	8 Bit Volatile	Update Rate	Power-up write
Display Format	Standard	Decimal Places	0
Coding	RO, ND, NC, PT, BU		

Product Type (11.063) shows the core product type as given in the table below. The drive could be the basic product or a derivative of the basic product as defined by *Drive Derivative* (11.028).

***Product Type* (11.063)**	**Core product range**
0	Unidrive M600 to M800
1	Unidrive M100 to M400 & ID300 to ID302

Parameter	11.064 *Product Identifier Characters*		
Short description	Displays the product identifier characters		
Mode	RFC-A		
Minimum	1295265840	Maximum	2147483647
Default		Units	
Type	32 Bit Volatile	Update Rate	Power-up write
Display Format	String	Decimal Places	0
Coding	RO, ND, NC, PT		

The drive model and rating can be identified as AAAA B nnnppppp CCCC DD EE FFF where each section of the model identifier is taken from a parameter. AAAA, B, CCCC, DDDD, EE and FFF are alpha-numeric characters. nnn and ppppp are decimal digits.

Section of identifier	Parameter
AAAA	*Product Identifier Characters* (11.064)
nnn	*Frame size and voltage code* (11.065)
ppppp	*Drive current rating* (11.068)
CCCC	*Additional Identifier Characters 1* (11.091)
DDEE	*Additional Identifier Characters 2* (11.092)
FFFB	*Additional Identifier Characters 3* (11.093)

Product Identifier Characters (11.064) as defined in the table below.

Digits	Meaning
3 to 0	Product identifier (e.g. Mxxx or Ixxx)

Frame size and voltage code (11.065)is split into two fields as defined in the table below.

Digits	Meaning
2 to 1	Frame size.
0	Voltage code (1 = 110V, 2 = 230V, 4 = 400V, 5 = 575V, 6 = 690V)

Drive current rating (11.068) is as defined in the table below.

Digits	Meaning
4 to 0	Drive current rating (i.e. 00133 = 13.3A)

Example
The model number M101-04200133 A101 00 AB100 would be displayed in parameters as follows

Parameter	Value
Product Identifier Characters (11.064)	M101
Frame size and voltage code (11.065)	042
Drive current rating (11.068)	00133
Additional Identifier Characters 1 (11.091)	A101
Additional Identifier Characters 2 (11.092)	00AB
Additional Identifier Characters 3 (11.093)	100-

Parameter	11.065 *Frame size and voltage code*		
Short description	Displays the frame size and voltage code		
Mode	RFC-A		
Minimum	0 (Display: 000)	Maximum	999 (Display: 999)
Default		Units	
Type	16 Bit Volatile	Update Rate	Power-up write
Display Format	Lead Zero Pad	Decimal Places	0
Coding	RO, ND, NC, PT		

See *Product Identifier Characters* (11.064).

Parameter	11.066 *Power Stage Identifier*		
Short description	Displays the power stage identifiers within the drive		
Mode	RFC-A		
Minimum	0	Maximum	255
Default		Units	
Type	8 Bit Volatile	Update Rate	Power-up write
Display Format	Standard	Decimal Places	0
Coding	RO, ND, NC, PT, BU		

Power Stage Identifier (11.066) is used to show power stages that require changes to the drive user parameters (i.e. visibility, range or defaults). It is anticipated that all power stages will require the same parameter structure, and so *Power Stage Identifier* (11.066) will always be equal to zero. It should be noted that this parameter does not identify the rating of the power stage.

***Power Stage Identifier* (11.066)**	**Power stage**
0	Standard M600-M800
1	Standard M100-M400
2	Standard ID300,ID302

Parameter	**11.067** ***Control Board Identifier***		
Short description	Displays the control board identifiers within the drive		
Mode	RFC-A		
Minimum	0	Maximum	255
Default		Units	
Type	8 Bit Volatile	Update Rate	Power-up write
Display Format	Standard	Decimal Places	0
Coding	RO, ND, NC, PT, BU		

Control Board Identifier (11.067) identifies the main control board hardware as given in the table below.

***Control Board Identifier* (11.067)**	**Control board**
0	Reserved
1	Reserved
2	M100
3	Reserved
4	Reserved
5	M101
6	Reserved
7	Reserved
8	M200
9	Reserved
10	Reserved
11	M201
12	Reserved
13	Reserved
14	M300
15	Reserved
16	Reserved
17	M400
18	ID300/ID302

Parameter	**11.068** ***Drive current rating***		
Short description	Drive current rating in 0.1 of Amps		
Mode	RFC-A		
Minimum	0 (Display: 00000)	Maximum	32767 (Display: 32767)
Default		Units	
Type	16 Bit Volatile	Update Rate	Power-up write
Display Format	Lead Zero Pad	Decimal Places	0
Coding	RO, ND, NC, PT		

See *Product Identifier Characters* (11.064).

Parameter	**11.070** ***Core Parameter Database Version***		
Short description	Displays the core parameter database version within the drive		
Mode	RFC-A		
Minimum	0.00	Maximum	99.99
Default		Units	
Type	16 Bit Volatile	Update Rate	Power-up write
Display Format	Standard	Decimal Places	2
Coding	RO, ND, NC, PT		

Core Parameter Database Version (11.070) gives the version number of the parameter database used to define the core parameter menus in the drive (Menu 1 to 14 and 21 to 23) in 2 digit BCD format. All other menus are customisable and if these menus are changed their default values are automatically loaded. However, if the drive software is changed it may be necessary to load defaults for all menus, although this will only be required rarely. Defaults for all menus are loaded when the most significant digit of *Core Parameter Database Version* (11.070) changes. Therefore if the drive firmware is modified and the most significant digit of the core database version has changed an *EEPROM Fail*.001 trip is initiated and default parameters are loaded.

Parameter	11.072 *NV Media Card Create Special File*		
Short description	Defines if a parameter file is created as a macro file during transfer		
Mode	RFC-A		
Minimum	0	Maximum	1
Default	0	Units	
Type	8 Bit Volatile	Update Rate	Background read
Display Format	Standard	Decimal Places	0
Coding	RW, NC		

If *NV Media Card Create Special File* (11.072) = 1 when a parameter file is transferred to an NV media card the file is created as a macro file. *NV Media Card Create Special File* (11.072) is reset to 0 after the file is created or the transfer fails.

Parameter	11.073 *NV Card Type Fitted*		
Short description	Displays the type of the currently fitted NV media card		
Mode	RFC-A		
Minimum	0	Maximum	2
Default		Units	
Type	8 Bit Volatile	Update Rate	Background write
Display Format	Standard	Decimal Places	0
Coding	RO, TE, ND, NC, PT		

Value	*Text*
0	None
1	Reserved
2	SD Card

NV Card Type Fitted (11.073) shows the type of non-volatile media card inserted in the drive.

Parameter	11.075 *NV Media Card Read-only Flag*		
Short description	Displays the state of the read-only flag for the currently fitted card		
Mode	RFC-A		
Minimum	0	Maximum	1
Default		Units	
Type	1 Bit Volatile	Update Rate	Background write
Display Format	Standard	Decimal Places	0
Coding	RO, ND, NC, PT		

NV Media Card Read-only Flag (11.075) shows the state of the read-only flag for the currently fitted card.

Parameter	11.076 *NV Media Card Warning Suppression Flag*		
Short description	Displays the state of the warning flag for the currently fitted card		
Mode	RFC-A		
Minimum	0	Maximum	1
Default		Units	
Type	1 Bit Volatile	Update Rate	Background write
Display Format	Standard	Decimal Places	0
Coding	RO, ND, NC, PT		

NV Media Card Warning Suppression Flag (11.076) shows the state of the warning flag for the currently fitted card.

Parameter	11.077 *NV Media Card File Required Version*		
Short description	Displays the version number for a file when it is created on an NV media card		
Mode	RFC-A		
Minimum	0	Maximum	9999
Default		Units	
Type	16 Bit Volatile	Update Rate	Background write
Display Format	Standard	Decimal Places	0
Coding	RW, ND, NC, PT		

The value of *NV Media Card File Required Version* (11.077) is used as the version number for a file when it is created on an NV media card. *NV Media Card File Required Version* (11.077) is reset to 0 when the file is created or the transfer fails.

Parameter	11.079 *Drive Name Characters 1-4*		
Short description	Defines characters 1-4 of a string which can be used to identify the drive		
Mode	RFC-A		
Minimum	-2147483648	Maximum	2147483647
Default	757935405	Units	
Type	32 Bit User Save	Update Rate	N/A
Display Format	String	Decimal Places	0
Coding	RW, PT		

Drive Name Characters 1-4 (11.079) to *Drive Name Characters 13-16* (11.082) can be used to store a 16 character string which can be used to identify the drive. The string is arranged as shown below.

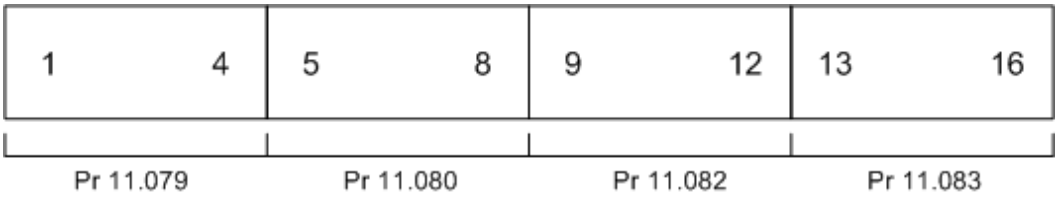

This uses the standard ASCII character set.

If *Status Mode Parameter 1* (11.018) or *Status Mode Parameter 2* (11.019) are set to 11.079 then the drive name is fully displayed in status view using *Drive Name Characters 1-4* (11.079) to *Drive Name Characters 13-16* (11.082). Note that only 15 characters can be displayed on M400 and only 6 characters on M100-M300.

Parameter	11.080 *Drive Name Characters 5-8*		
Short description	Defines characters 5-8 of a string which can be used to identify the drive		
Mode	RFC-A		
Minimum	-2147483648	Maximum	2147483647
Default	757935405	Units	
Type	32 Bit User Save	Update Rate	N/A
Display Format	String	Decimal Places	0
Coding	RW, PT		

See *Drive Name Characters 1-4* (11.079).

Parameter	11.081 *Drive Name Characters 9-12*		
Short description	Defines characters 9-12 of a string which can be used to identify the drive		
Mode	RFC-A		
Minimum	-2147483648	Maximum	2147483647
Default	757935405	Units	
Type	32 Bit User Save	Update Rate	N/A
Display Format	String	Decimal Places	0
Coding	RW, PT		

See *Drive Name Characters 1-4* (11.079).

Parameter	11.082 *Drive Name Characters 13-16*		
Short description	Defines characters 13-16 of a string which can be used to identify the drive		
Mode	RFC-A		
Minimum	-2147483648	Maximum	2147483647
Default	757935405	Units	
Type	32 Bit User Save	Update Rate	N/A
Display Format	String	Decimal Places	0
Coding	RW, PT		

See *Drive Name Characters 1-4* (11.079).

Parameter	11.084 *Drive Mode*		
Short description	Defines and displays the current drive mode		
Mode	RFC-A		
Minimum	1	Maximum	2
Default		Units	
Type	8 Bit User Save	Update Rate	Background read/write
Display Format	Standard	Decimal Places	0
Coding	RO, TE, ND, NC, PT		

Value	*Text*
1	Open-loop
2	RFC-A

Drive Mode (11.084) is used to hold the currently active drive mode.

Parameter	**11.085** ***Security Status***		
Short description	Displays the security status within the drive		
Mode	RFC-A		
Minimum	0	Maximum	3
Default		Units	
Type	8 Bit Power Down Save	Update Rate	Background write
Display Format	Standard	Decimal Places	0
Coding	RO, TE, ND, NC, PT		

Value	*Text*
0	None
1	Read-only
2	Status-only
3	No Access

Security Status (11.085) shows the security that will apply when security is enabled by setting a non-zero value for *User Security Code* (11.030).

Parameter	**11.086** ***Menu Access Status***		
Short description	Displays the amount of access of the menus within the drive		
Mode	RFC-A		
Minimum	0	Maximum	2
Default		Units	
Type	8 Bit Power Down Save	Update Rate	Background write
Display Format	Standard	Decimal Places	0
Coding	RO, TE, ND, NC, PT		

Value	*Text*
0	Menu 0 Level 1
1	Menu 0
2	All Menus

If *Menu Access Status* (11.086) = 0 then only parameters up to 10 can be accessed in Menu 0 with a keypad. If *Menu Access Status* (11.086) = 1 then only parameters in Menu 0 can be accessed with a keypad. If *Menu Access Status* (11.086) = 2 then all menus can be accessed with a keypad.

Parameter	**11.090** ***Keypad Port Serial Address***		
Short description	Defines the node address for the keypad port serial comms interface		
Mode	RFC-A		
Minimum	1	Maximum	16
Default	1	Units	
Type	8 Bit User Save	Update Rate	Background read
Display Format	Standard	Decimal Places	0
Coding	RW		

Keypad Port Serial Address (11.090) defines the node address for the keypad port serial comms interface. Normally the default value of 1 is used, but this can be changed if required. The keypad attached to the port will sense the address automatically.

Parameter	**11.091** ***Additional Identifier Characters 1***		
Short description	Displays the additional identifier characters		
Mode	RFC-A		
Minimum	-2147483648	Maximum	2147483647
Default		Units	
Type	32 Bit Volatile	Update Rate	Power-up write
Display Format	String	Decimal Places	0
Coding	RO, ND, NC, PT		

See *Product Identifier Characters* (11.064).

Parameter	11.092 *Additional Identifier Characters 2*		
Short description	Displays the additional identifier characters		
Mode	RFC-A		
Minimum	-2147483648	Maximum	2147483647
Default		Units	
Type	32 Bit Volatile	Update Rate	Power-up write
Display Format	String	Decimal Places	0
Coding	RO, ND, NC, PT		

See *Product Identifier Characters* (11.064).

Parameter	11.093 *Additional Identifier Characters 3*		
Short description	Displays the additional identifier characters		
Mode	RFC-A		
Minimum	-2147483648	Maximum	2147483647
Default		Units	
Type	32 Bit Volatile	Update Rate	Power-up write
Display Format	String	Decimal Places	0
Coding	RO, ND, NC, PT		

See *Product Identifier Characters* (11.064).

Parameter	11.097 *AI ID Code*		
Short description	Indicates the AI module type fitted in the AI slot		
Mode	RFC-A		
Minimum	0	Maximum	5
Default		Units	
Type	8 Bit Volatile	Update Rate	Background read
Display Format	Standard	Decimal Places	0
Coding	RO, TE, ND, NC, PT, BU		

Value	*Text*
0	None
1	SD Card
2	RS-485
3	Reserved
4	Reserved
5	RS-485 + Backup

AI ID Code (11.097) indicates the Adaptor Interface module type fitted in the AI slot.

Parameter	11.098 *24V Loss Alarm Enable*		
Short description	Enables the 24V loss alarm		
Mode	RFC-A		
Minimum	0	Maximum	1
Default	0	Units	
Type	1 Bit User Save	Update Rate	background
Display Format	Standard	Decimal Places	0
Coding	RW		

24V Loss Alarm Enable (11.098) enables the 24V loss alarm. If *24V Supply Input State* (08.043) = 0 and *24V Loss Alarm Enable* (11.098) = 1 then the alarm is active and *Active Alarm* (10.104) will indicate *24V Backup Lost*.

Parameter	11.099 *Modbus Parameter Conversion*		
Short description	Converts parameter values over Modbus comms for backwards compatibility.		
Mode	RFC-A		
Minimum	0 (Display: 0000)	Maximum	15 (Display: 1111)
Default	0 (Display: 0000)	Units	
Type	16 Bit User Save	Update Rate	
Display Format	Binary	Decimal Places	0
Coding	RW		

If *Modbus Parameter Conversion* (11.099) bits are turned on then the following parameters are converted when read or written over modbus serial comms.

This is NOT a full comms compatibility to previous drive generations. Only the following parameters are converted.

Because of the limited number of segments on drives with an LED display, these drives will indicate the parameter value as a decimal value rather than

a binary value.

Modbus Parameter Conversion (11.099) bits	Effect
0	Frequency parameters: 1.001,1.002,1.003,1.004,1.005,1.006,1.007,1.017,1.021,1.022, 1.023,1.024,1.025,1.026,1.027,1.028,1.029,1.030,1.031,1.032, 1.033,1.034,1.036,1.037,1.038,2.001,3.001,3.005,3.006,3.022, 3.043,3.045,5.001,5.006,12.044,12.045,21.001,21.002,21.006 scaled by 10.
1	Source/Destination parameters: 7.010,7.014,7.019,8.021,8.022,8.023,8.024,8.025,8.028,9.004,9.006, 9.010,9.014,9.016,9.020,9.025,9.033,12.003,12.007,12.008,12.009, 12.011,12.023,12.027,12.028,12.029,12.031,14.002,14.003,14.004,14.009,14.016. Parameter number is converted from 3 to 2 digits (i.e. #1.01 is #1.001)
2	Percentage parameters: 7.001,7.002,7.030,7.031,9.003,12.004,12.005,12.012,12.024,12.025, 12.032,14.001,14.013,14.014,14.019,14.020,14.021,14.022 scaled by 10
3	Motor parameters: 5.008,5.017,5.024,21.008,21.012,21.014 scaled by 10

Examples:

bit 0:

If 01.021 = 1.23Hz, then value read is 12 equivalent of 1.20Hz

If value 123 is written to 01.021 then 01.021 = 12.30Hz

bit 1:

If *Analog Input 1 Destination A* (07.010) = 1.036, then value read is 136.

If value 136 is written to *Analog Input 1 Destination A* (07.010) then *Analog Input 1 Destination A* (07.010) = 1.036.

bit 2:

If *Analog Input 1* (07.001) = 50.0%, then value read is 500.

bit 3:

If *Motor Rated Speed* (05.008) = 1500.0, then value read is 1500.

If value 1500 is written to *Motor Rated Speed* (05.008) then *Motor Rated Speed* (05.008) = 1500.0.

Menu 12 Single Line Descriptions − *User Functions 2 and Brake Control*

Mode: RFC-A

Parameter		Range	Default	Type					
12.001	Threshold Detector 1 Output	Off (0) or On (1)		RO	Bit	ND	NC	PT	
12.002	Threshold Detector 2 Output	Off (0) or On (1)		RO	Bit	ND	NC	PT	
12.003	Threshold Detector 1 Source	0.000 to 30.999	0.000	RW	Num			PT	US
12.004	Threshold Detector 1 Level	0.00 to 100.00 %	0.00 %	RW	Num				US
12.005	Threshold Detector 1 Hysteresis	0.00 to 25.00 %	0.00 %	RW	Num				US
12.006	Threshold Detector 1 Output Invert	Off (0) or On (1)	Off (0)	RW	Bit				US
12.007	Threshold Detector 1 Destination	0.000 to 30.999	0.000	RW	Num	DE		PT	US
12.008	Variable Selector 1 Source 1	0.000 to 30.999	0.000	RW	Num			PT	US
12.009	Variable Selector 1 Source 2	0.000 to 30.999	0.000	RW	Num			PT	US
12.010	Variable Selector 1 Mode	Input 1 (0), Input 2 (1), Add (2), Subtract (3), Multiply (4), Divide (5), Time Const (6), Ramp (7), Modulus (8), Powers (9)	Input 1 (0)	RW	Txt				US
12.011	Variable Selector 1 Destination	0.000 to 30.999	0.000	RW	Num	DE		PT	US
12.012	Variable Selector 1 Output	±100.00 %		RO	Num	ND	NC	PT	
12.013	Variable Selector 1 Source 1 Scaling	±4.000	1.000	RW	Num				US
12.014	Variable Selector 1 Source 2 Scaling	±4.000	1.000	RW	Num				US
12.015	Variable Selector 1 Control	0.00 to 100.00	0.00	RW	Num				US
12.016	Variable Selector 1 Enable	Off (0) or On (1)	On (1)	RW	Bit				US
12.023	Threshold Detector 2 Source	0.000 to 30.999	0.000	RW	Num			PT	US
12.024	Threshold Detector 2 Level	0.00 to 100.00 %	0.00 %	RW	Num				US
12.025	Threshold Detector 2 Hysteresis	0.00 to 25.00 %	0.00 %	RW	Num				US
12.026	Threshold Detector 2 Output Invert	Off (0) or On (1)	Off (0)	RW	Bit				US
12.027	Threshold Detector 2 Destination	0.000 to 30.999	0.000	RW	Num	DE		PT	US
12.028	Variable Selector 2 Source 1	0.000 to 30.999	0.000	RW	Num			PT	US
12.029	Variable Selector 2 Source 2	0.000 to 30.999	0.000	RW	Num			PT	US
12.030	Variable Selector 2 Mode	Input 1 (0), Input 2 (1), Add (2), Subtract (3), Multiply (4), Divide (5), Time Const (6), Ramp (7), Modulus (8), Powers (9)	Input 1 (0)	RW	Txt				US
12.031	Variable Selector 2 Destination	0.000 to 30.999	0.000	RW	Num	DE		PT	US
12.032	Variable Selector 2 Output	±100.00 %		RO	Num	ND	NC	PT	
12.033	Variable Selector 2 Source 1 Scaling	±4.000	1.000	RW	Num				US
12.034	Variable Selector 2 Source 2 Scaling	±4.000	1.000	RW	Num				US
12.035	Variable Selector 2 Control	0.00 to 100.00	0.00	RW	Num				US
12.036	Variable Selector 2 Enable	Off (0) or On (1)	On (1)	RW	Bit				US
12.040	BC Brake Release	Off (0) or On (1)		RO	Bit	ND	NC	PT	
12.041	BC Enable	Disable (0), Relay (1), Digital IO (2), User (3)	Disable (0)	RW	Txt				US
12.042	BC Upper Current Threshold	0 to 200 %	50 %	RW	Num				US
12.043	BC Lower Current Threshold	0 to 200 %	10 %	RW	Num				US
12.044	BC Brake Release Frequency	0.00 to 20.00 Hz	1.00 Hz	RW	Num				US
12.045	BC Brake Apply Frequency	0.00 to 20.00 Hz	2.00 Hz	RW	Num				US
12.046	BC Brake Release Delay	0.0 to 25.0 s	1.0 s	RW	Num				US
12.047	BC Post-brake Release Delay	0.0 to 25.0 s	1.0 s	RW	Num				US
12.050	BC Initial Direction	Ref (0), Forward (1), Reverse (2)	Ref (0)	RW	Txt				US
12.051	BC Brake Apply Through Zero Threshold	0.00 to 20.00 Hz	1.00 Hz	RW	Num				US

RW	Read / Write	RO	Read-only	Bit	Bit parameter	Txt	Text string	Date	Date parameter	Time	Time parameter
Chr	Character parameter	Bin	Binary parameter	IP	IP address	Mac	MAC address	Ver	Version number	SMP	Slot, menu, parameter
Num	Number parameter	DE	Destination	ND	No default value	RA	Rating dependent	NC	Non-copyable	PT	Protected
FI	Filtered	US	User save	PS	Power-down save						

Menu 12 − *User Functions 2 and Brake Control*

Mode: RFC-A

Menu 12 provides parameters for the following features:

1. Threshold detectors
2. Variable selectors
3. Mechanical brake controller

Parameter	**12.001** ***Threshold Detector 1 Output***		
Short description	Displays the output of threshold detector 1		
Mode	RFC-A		
Minimum	0	Maximum	1
Default		Units	
Type	1 Bit Volatile	Update Rate	4ms write
Display Format	Standard	Decimal Places	0
Coding	RO, ND, NC, PT		

The threshold detector functions are always active even if the source and destination are not routed to valid parameters. If the source is not a valid parameter then the source value is taken as 0. The update rate for each of the threshold detector functions is always 4ms.

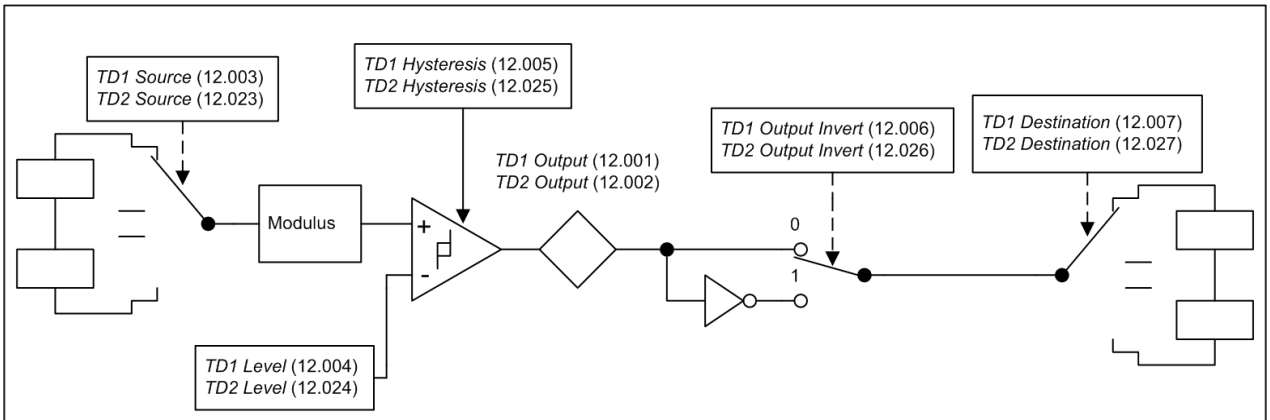

Fig.12.1: Threshold detectors

The following description is for threshold detector 1, but threshold detector 2 operates in the same way. The level of the parameter defined by *Threshold Detector 1 Source* (12.003) is converted to a percentage and compared to *Threshold Detector 1 Level* (12.004) with hysteresis to give *Threshold Detector 1 Output* (12.001) as follows:

Source	***Threshold Detector 1 Output* (12.001)**
Source < Lower threshold	0
Lower threshold ≤ Source < Upper threshold	No change of state
Source ≥ Upper threshold	1

Lower threshold = *Threshold Detector 1 Level* (12.004) - (*Threshold Detector 1 Hysteresis* (12.005) / 2)

Upper threshold = *Threshold Detector 1 Level* (12.004) + (*Threshold Detector 1 Hysteresis* (12.005) / 2)

The output value can then be inverted with *Threshold Detector 1 Output Invert* (12.006) before being routed to the destination defined by *Threshold Detector 1 Destination* (12.007).

Parameter	**12.002** ***Threshold Detector 2 Output***		
Short description	Displays the output of threshold detector 2		
Mode	RFC-A		
Minimum	0	Maximum	1
Default		Units	
Type	1 Bit Volatile	Update Rate	4ms write
Display Format	Standard	Decimal Places	0
Coding	RO, ND, NC, PT		

See *Threshold Detector 1 Output* (12.001).

Parameter	**12.003** ***Threshold Detector 1 Source***		
Short description	Defines the source paramter for threshold detector 1		
Mode	RFC-A		
Minimum	0.000	Maximum	30.999
Default	0.000	Units	
Type	16 Bit User Save	Update Rate	Drive reset read
Display Format	Standard	Decimal Places	3
Coding	RW, PT, BU		

See *Threshold Detector 1 Output* (12.001).

Parameter	**12.004** ***Threshold Detector 1 Level***		
Short description	Defines the reference level for threshold detector 1		
Mode	RFC-A		
Minimum	0.00	Maximum	100.00
Default	0.00	Units	%
Type	16 Bit User Save	Update Rate	4ms read
Display Format	Standard	Decimal Places	2
Coding	RW		

See *Threshold Detector 1 Output* (12.001).

Parameter	12.005 *Threshold Detector 1 Hysteresis*		
Short description	Defines the hysteresis for threshold detector		
Mode	RFC-A		
Minimum	0.00	Maximum	25.00
Default	0.00	Units	%
Type	16 Bit User Save	Update Rate	4ms read
Display Format	Standard	Decimal Places	2
Coding	RW		

See *Threshold Detector 1 Output* (12.001).

Parameter	12.006 *Threshold Detector 1 Output Invert*		
Short description	Set to 1 to invert the output of threshold detector 1		
Mode	RFC-A		
Minimum	0	Maximum	1
Default	0	Units	
Type	1 Bit User Save	Update Rate	4ms read
Display Format	Standard	Decimal Places	0
Coding	RW		

See *Threshold Detector 1 Output* (12.001).

Parameter	12.007 *Threshold Detector 1 Destination*		
Short description	Defines the destination parameter for threshold detector 1		
Mode	RFC-A		
Minimum	0.000	Maximum	30.999
Default	0.000	Units	
Type	16 Bit User Save	Update Rate	Drive reset read
Display Format	Standard	Decimal Places	3
Coding	RW, DE, PT, BU		

See *Threshold Detector 1 Output* (12.001).

Parameter	12.008 *Variable Selector 1 Source 1*		
Short description	Defines the 1st source parameter for variable selector 1		
Mode	RFC-A		
Minimum	0.000	Maximum	30.999
Default	0.000	Units	
Type	16 Bit User Save	Update Rate	Drive reset read
Display Format	Standard	Decimal Places	3
Coding	RW, PT, BU		

The variable selector functions are always active even if the source and destination are not routed to valid parameters. If a source is not a valid parameter then the source value is taken as 0. The update rate for each of the variable selector functions is always 4ms.

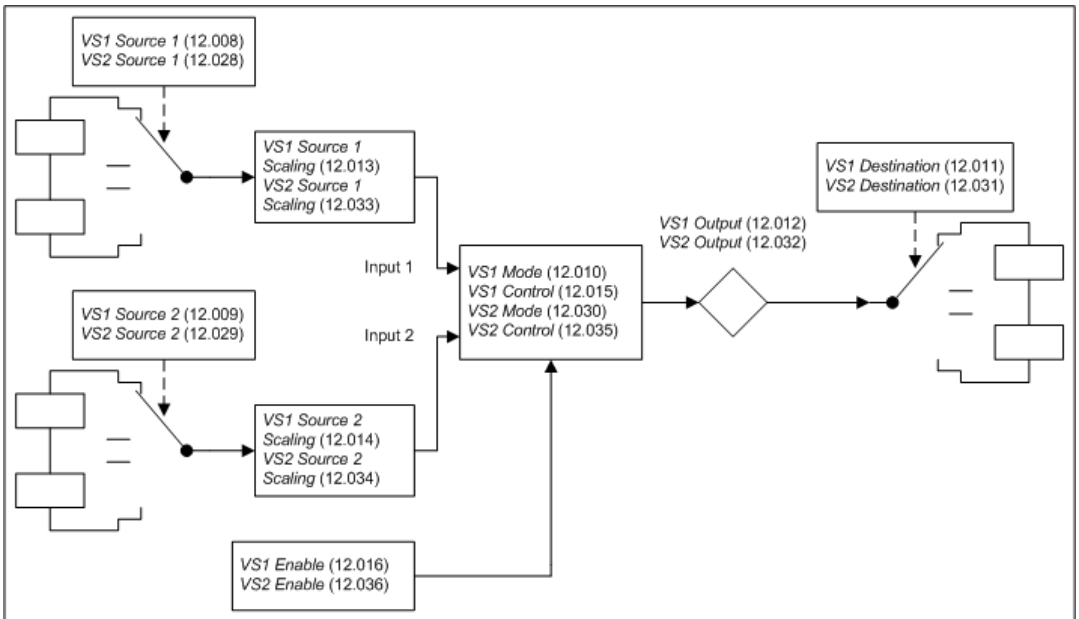

Fig.12.2: Variable Selectors

The following description is for variable selector 1, but variable selector 2 operates in the same way. The source parameters selected with *Variable Selector 1 Source 1* (12.008) and *Variable Selector 1 Source 2* (12.009) are converted to a percentage value, scaled with *Variable Selector 1 Source 1 Scaling* (12.013) and *Variable Selector 1 Source 2 Scaling* (12.014) respectively and then combined with a function defined by *Variable Selector 1 Mode* (12.010) to give *Variable Selector 1 Output* (12.012) as a percentage value. If *Variable Selector 1 Enable* (12.016) = 1 then the function operates normally. If *Variable Selector 1 Enable* (12.016) = 0 then *Variable Selector 1 Output* (12.012) = 0.00% and any states within the function are reset (i.e. the time constant function accumulator is held at zero). If the value of *Variable Selector 1 Mode* (12.010) is changed then all internal function state are also reset.

The table below shows the functions that can be selected with *Variable Selector 1 Mode* (12.010).

***Variable Selector 1 Mode* (12.010)**	***Variable Selector 1 Output* (12.012)**
0: Input 1	Input 1
1: Input 2	Input 2
2: Add	Input 1 + Input 2
3: Subtract	Input 1 - Input 2
4: Multiply	(Input 1 x Input 2) / 100.00%
5: Divide	(Input 1 x 100.00%) / Input 2
6: Time Const	Input 1 / (1 + τs) where τ is *Variable Selector 1 Control* (12.015) in seconds
7: Ramp	Input 1 is an input to a linear ramp function where the time to ramp from 0.00% to 100.00% of the input parameter range is defined by *Variable Selector 1 Control* (12.015) in seconds. e.g. if the input parameter is at 50% of its range, the output value will reach 50% in 50% of the time set in *Variable Selector 1 Control* (12.015)
8: Modulus	| Input 1 |
9: Powers	If *Variable Selector 1 Control* (12.015) = 0.02 then Output = $Input^2$ / 100.00% Else if *Variable Selector 1 Control* (12.015) = 0.03 then Output = $Input^3$ / $(100.00\%)^2$ Else Output = Input 1

Parameter	**12.009 *Variable Selector 1 Source 2***		
Short description	Defines the 2nd source parameter for variable selector 1		
Mode	RFC-A		
Minimum	0.000	Maximum	30.999
Default	0.000	Units	
Type	16 Bit User Save	Update Rate	Drive reset read
Display Format	Standard	Decimal Places	3
Coding	RW, PT, BU		

See *Variable Selector 1 Source 1* (12.008).

Parameter	**12.010 *Variable Selector 1 Mode***		
Short description	Defines the mode for variable selector		
Mode	RFC-A		
Minimum	0	Maximum	9
Default	0	Units	
Type	8 Bit User Save	Update Rate	Background read
Display Format	Standard	Decimal Places	0
Coding	RW, TE		

Value	***Text***
0	Input 1
1	Input 2
2	Add
3	Subtract
4	Multiply
5	Divide
6	Time Const
7	Ramp
8	Modulus
9	Powers

See *Variable Selector 1 Source 1* (12.008).

Parameter	**12.011 *Variable Selector 1 Destination***		
Short description	Defines the destination parameter for variable selector 1		
Mode	RFC-A		
Minimum	0.000	Maximum	30.999
Default	0.000	Units	
Type	16 Bit User Save	Update Rate	Drive reset read
Display Format	Standard	Decimal Places	3
Coding	RW, DE, PT, BU		

See *Variable Selector 1 Source 1* (12.008).

Parameter	**12.012 *Variable Selector 1 Output***		
Short description	Displays the output of variable selector 1		
Mode	RFC-A		
Minimum	-100.00	Maximum	100.00
Default		Units	%
Type	16 Bit Volatile	Update Rate	4ms write
Display Format	Standard	Decimal Places	2
Coding	RO, ND, NC, PT		

See *Variable Selector 1 Source 1* (12.008).

Parameter	**12.013 *Variable Selector 1 Source 1 Scaling***		
Short description	Defines the scaling for the 1st input for variable selector 1		
Mode	RFC-A		
Minimum	-4.000	Maximum	4.000
Default	1.000	Units	
Type	16 Bit User Save	Update Rate	4ms read
Display Format	Standard	Decimal Places	3
Coding	RW		

See *Variable Selector 1 Source 1* (12.008).

Parameter	12.014 *Variable Selector 1 Source 2 Scaling*		
Short description	Defines the scaling for the 2nd input for variable selector 1		
Mode	RFC-A		
Minimum	-4.000	Maximum	4.000
Default	1.000	Units	
Type	16 Bit User Save	Update Rate	4ms read
Display Format	Standard	Decimal Places	3
Coding	RW		

See *Variable Selector 1 Source 1* (12.008).

Parameter	12.015 *Variable Selector 1 Control*		
Short description	Defines the control for variable selector 1		
Mode	RFC-A		
Minimum	0.00	Maximum	100.00
Default	0.00	Units	
Type	16 Bit User Save	Update Rate	4ms read
Display Format	Standard	Decimal Places	2
Coding	RW		

See *Variable Selector 1 Source 1* (12.008).

Parameter	12.016 *Variable Selector 1 Enable*		
Short description	Enables variable selector 1		
Mode	RFC-A		
Minimum	0	Maximum	1
Default	1	Units	
Type	1 Bit User Save	Update Rate	4ms read
Display Format	Standard	Decimal Places	0
Coding	RW, BU		

See *Variable Selector 1 Source 1* (12.008) for more details. *Variable Selector 1 Enable* (12.016) and *Variable Selector 2 Enable* (12.036) have a default of 1 so that if these parameters are not used the variable selectors will still function.

Parameter	12.023 *Threshold Detector 2 Source*		
Short description	Defines the source paramter for threshold detector 2		
Mode	RFC-A		
Minimum	0.000	Maximum	30.999
Default	0.000	Units	
Type	16 Bit User Save	Update Rate	Drive reset read
Display Format	Standard	Decimal Places	3
Coding	RW, PT, BU		

See *Threshold Detector 1 Output* (12.001).

Parameter	12.024 *Threshold Detector 2 Level*		
Short description	Defines the reference level for threshold detector 2		
Mode	RFC-A		
Minimum	0.00	Maximum	100.00
Default	0.00	Units	%
Type	16 Bit User Save	Update Rate	4ms read
Display Format	Standard	Decimal Places	2
Coding	RW		

See *Threshold Detector 1 Output* (12.001).

Parameter	12.025 *Threshold Detector 2 Hysteresis*		
Short description	Defines the hysteresis for threshold detector 2		
Mode	RFC-A		
Minimum	0.00	Maximum	25.00
Default	0.00	Units	%
Type	16 Bit User Save	Update Rate	4ms read
Display Format	Standard	Decimal Places	2
Coding	RW		

See *Threshold Detector 1 Output* (12.001).

Parameter	12.026 *Threshold Detector 2 Output Invert*		
Short description	Set to 1 to invert the output of threshold detector 2		
Mode	RFC-A		
Minimum	0	Maximum	1
Default	0	Units	
Type	1 Bit User Save	Update Rate	4ms read
Display Format	Standard	Decimal Places	0
Coding	RW		

See *Threshold Detector 1 Output* (12.001).

Parameter	12.027 *Threshold Detector 2 Destination*		
Short description	Defines the destination parameter for threshold detector 2		
Mode	RFC-A		
Minimum	0.000	Maximum	30.999
Default	0.000	Units	
Type	16 Bit User Save	Update Rate	Drive reset read
Display Format	Standard	Decimal Places	3
Coding	RW, DE, PT, BU		

See *Threshold Detector 1 Output* (12.001).

Parameter	12.028 *Variable Selector 2 Source 1*		
Short description	Defines the 1st source parameter for variable selector 2		
Mode	RFC-A		
Minimum	0.000	Maximum	30.999
Default	0.000	Units	
Type	16 Bit User Save	Update Rate	Drive reset read
Display Format	Standard	Decimal Places	3
Coding	RW, PT, BU		

See *Variable Selector 1 Source 1* (12.008).

Parameter	12.029 *Variable Selector 2 Source 2*		
Short description	Defines the 2nd source parameter for variable selector 2		
Mode	RFC-A		
Minimum	0.000	Maximum	30.999
Default	0.000	Units	
Type	16 Bit User Save	Update Rate	Drive reset read
Display Format	Standard	Decimal Places	3
Coding	RW, PT, BU		

See *Variable Selector 1 Source 1* (12.008).

Parameter	12.030 *Variable Selector 2 Mode*		
Short description	Defines the mode for variable selector 2		
Mode	RFC-A		
Minimum	0	Maximum	9
Default	0	Units	
Type	8 Bit User Save	Update Rate	Background read
Display Format	Standard	Decimal Places	0
Coding	RW, TE		

Value	*Text*
0	Input 1
1	Input 2
2	Add
3	Subtract
4	Multiply
5	Divide
6	Time Const
7	Ramp
8	Modulus
9	Powers

See *Variable Selector 1 Source 1* (12.008).

Parameter	12.031 *Variable Selector 2 Destination*		
Short description	Defines the destination parameter for variable selector 2		
Mode	RFC-A		
Minimum	0.000	Maximum	30.999
Default	0.000	Units	
Type	16 Bit User Save	Update Rate	Drive reset read
Display Format	Standard	Decimal Places	3
Coding	RW, DE, PT, BU		

See *Variable Selector 1 Source 1* (12.008).

Parameter	12.032 *Variable Selector 2 Output*		
Short description	Displays the output of variable selector 2		
Mode	RFC-A		
Minimum	-100.00	Maximum	100.00
Default		Units	%
Type	16 Bit Volatile	Update Rate	4ms write
Display Format	Standard	Decimal Places	2
Coding	RO, ND, NC, PT		

See *Variable Selector 1 Source 1* (12.008).

Parameter	12.033 *Variable Selector 2 Source 1 Scaling*		
Short description	Defines the scaling for the 1st input for variable selector 2		
Mode	RFC-A		
Minimum	-4.000	Maximum	4.000
Default	1.000	Units	
Type	16 Bit User Save	Update Rate	4ms read
Display Format	Standard	Decimal Places	3
Coding	RW		

See *Variable Selector 1 Source 1* (12.008).

Parameter	12.034 *Variable Selector 2 Source 2 Scaling*		
Short description	Defines the scaling for the 2nd input for variable selector 2		
Mode	RFC-A		
Minimum	-4.000	Maximum	4.000
Default	1.000	Units	
Type	16 Bit User Save	Update Rate	4ms read
Display Format	Standard	Decimal Places	3
Coding	RW		

See *Variable Selector 1 Source 1* (12.008).

Parameter	12.035 *Variable Selector 2 Control*		
Short description	Defines the control for variable selector 2		
Mode	RFC-A		
Minimum	0.00	Maximum	100.00
Default	0.00	Units	
Type	16 Bit User Save	Update Rate	4ms read
Display Format	Standard	Decimal Places	2
Coding	RW, BU		

See *Variable Selector 1 Source 1* (12.008).

Parameter	12.036 *Variable Selector 2 Enable*		
Short description	Enables variable selector 2		
Mode	RFC-A		
Minimum	0	Maximum	1
Default	1	Units	
Type	1 Bit User Save	Update Rate	4ms read
Display Format	Standard	Decimal Places	0
Coding	RW, BU		

See *Variable Selector 1 Source 1* (12.008) and *Variable Selector 1 Enable* (12.016).

Parameter	12.040 *BC Brake Release*		
Short description	Inidicates that the brake controller has released the mechanical brake		
Mode	RFC-A		
Minimum	0	Maximum	1
Default		Units	
Type	1 Bit Volatile	Update Rate	4ms write
Display Format	Standard	Decimal Places	0
Coding	RO, ND, NC, PT		

The functions of *BC Brake Release* (12.040) and *BC Enable* (12.041) are the same in all drive modes and are described below. The functions of other brake controller parameters vary between drive modes, and these are described in separate sections.

The mechanical brake control function can be used to control an electro-mechanical brake via digital I/O.

BC Brake Release (12.040) = 0 when the brake should be applied and 1 when the brake should be released. Normally this should be routed to a digital output to control the mechanical brake.

If *BC Enable* (12.041) = 0 then the brake controller is disabled. The following parameters which are used by the brake controller to operate the drive are reset to 0 on the transition of *BC Enable* (12.041) from 1 to 0.

Parameter
Force Reference Direction (01.057)
Ramp Hold (02.003)

In closed loop mode, the torque produced may reduce as the frequency passes through zero. A brake controller similar to the one used for open loop mode is provided as shown in the diagram below.

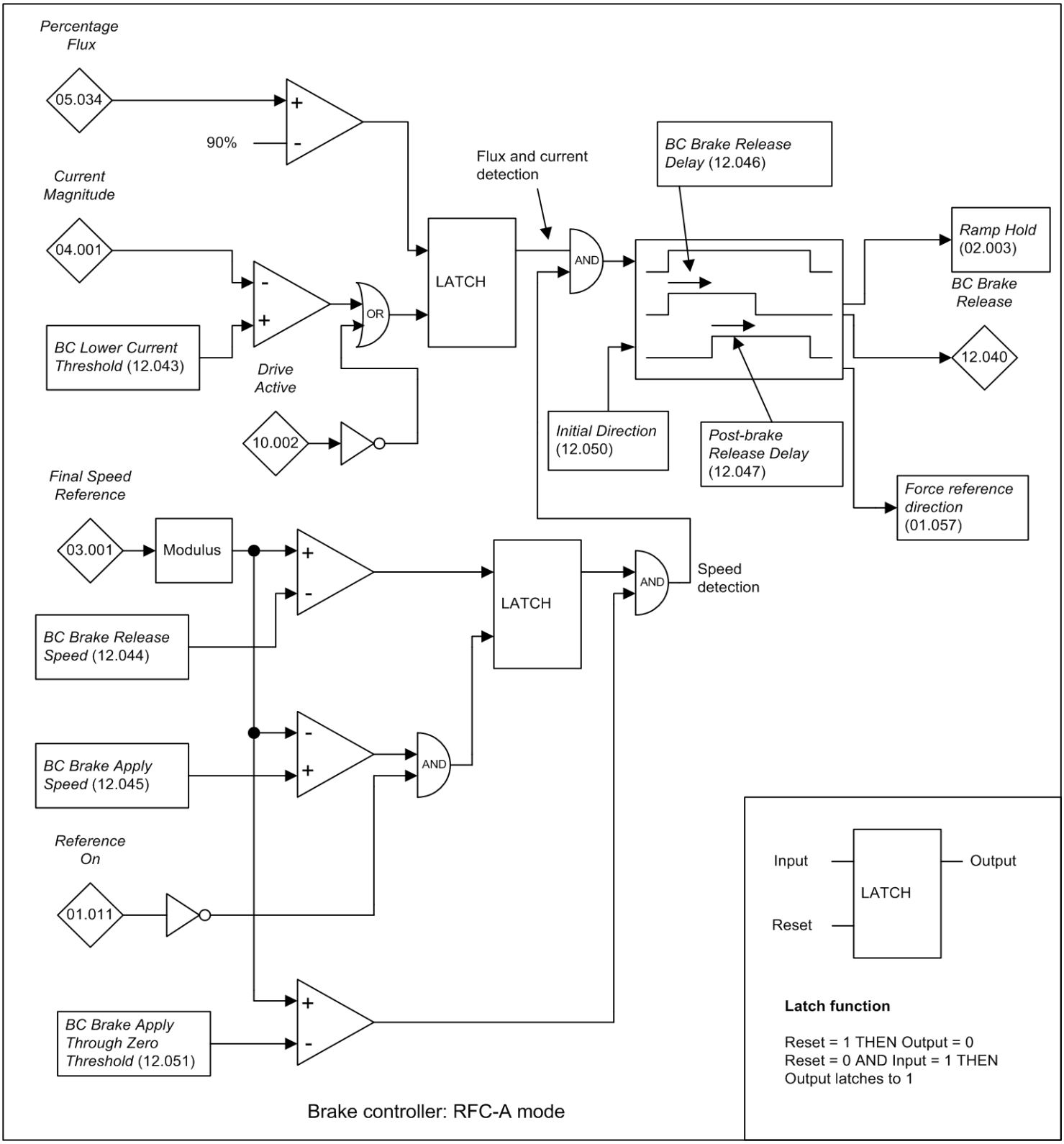

Brake controller: RFC-A mode

The brake controller operates in the same way as the open loop mode brake controller except for the following differences.

1. *Final Demand Reference* (03.001) is used instead of *Output Frequency* (05.001).
2. Current detection is replaced with flux and current detection as described below.

Flux and current detection
The flux and current detection signal is made active to allow the brake to be released when the motor flux exceeds 90% of its rated level. The flux and current detection signal remains active unless the motor current falls below *BC Lower Current Threshold* (12.043) or the drive is disabled. *BC Lower Current Threshold* (12.043) is used to detect if the motor has been disconnected from the drive and should be set to a suitable level to detect this condition.

Parameter	**12.041** ***BC Enable***		
Short description	Enables the brake control function		
Mode	RFC-A		
Minimum	0	Maximum	3
Default	0	Units	
Type	8 Bit User Save	Update Rate	Action on exit from edit and reset
Display Format	Standard	Decimal Places	0
Coding	RW, TE		

Value	*Text*
0	Disable
1	Relay
2	Digital IO
3	User

If *BC Enable* (12.041) = 0, the brake controller is disabled.

If *BC Enable* (12.041) = 1, the brake controller is enabled with I/O set up to control the brake via the relay output. Drive healthy is re-routed to digital I/O.

If *BC Enable* (12.041) = 2, the brake controller is enabled with I/O set up to control the brake via digital I/O. Drive healthy is routed to the relay output.

If *BC Enable* (12.041) = 3, the brake controller is enabled, but no parameters are set up to select the brake output.

Previous value of *BC Enable* (12.041)	**New value of *BC Enable* (12.041)**	***Digital I/O 1 Invert* (08.011)**	***Relay 1 Invert* (08.018)**	***Digital I/O 01 mode* (08.031)**	***DO1 Control* (08.091)**	***Relay 1 Control* (08.098)**
Any	0	0	0	1	0	0
Any	1	0	0	1	15	18
Not 1	2	0	No change	1	18	No change
1	2	0	0	1	18	15
0 or 1	3	0	0	1	0	0
2	3	0	No change	1	0	0

Action will only occur if the drive is inactive, not in UU state and no User Actions are running. Otherwise, the parameter will return to its pre altered value on exit from edit mode.

All parameters are saved if this parameter changes.

See *BC Brake Release* (12.040) for full description of brake controller operation.

Parameter	**12.042 *BC Upper Current Threshold***		
Short description	Defines the upper current threshold for the brake		
Mode	RFC-A		
Minimum	0	Maximum	200
Default	50	Units	%
Type	8 Bit User Save	Update Rate	4ms read
Display Format	Standard	Decimal Places	0
Coding	RW, BU		

See *BC Brake Release* (12.040).

Parameter	**12.043 *BC Lower Current Threshold***		
Short description	Defines the lower current limit for the brake		
Mode	RFC-A		
Minimum	0	Maximum	200
Default	10	Units	%
Type	8 Bit User Save	Update Rate	4ms read
Display Format	Standard	Decimal Places	0
Coding	RW, BU		

See *BC Brake Release* (12.040).

Parameter	**12.044 *BC Brake Release Frequency***		
Short description	Defines the brake release frequency		
Mode	RFC-A		
Minimum	0.00	Maximum	20.00
Default	1.00	Units	Hz
Type	16 Bit User Save	Update Rate	4ms read
Display Format	Standard	Decimal Places	2
Coding	RW, BU		

See *BC Brake Release* (12.040).

Parameter	**12.045 *BC Brake Apply Frequency***		
Short description	Defines the brake apply frequency		
Mode	RFC-A		
Minimum	0.00	Maximum	20.00
Default	2.00	Units	Hz
Type	16 Bit User Save	Update Rate	4ms read
Display Format	Standard	Decimal Places	2
Coding	RW, BU		

See *BC Brake Release* (12.040).

Parameter	**12.046 *BC Brake Release Delay***		
Short description	Defines the pre-brake release delay		
Mode	RFC-A		
Minimum	0.0	Maximum	25.0
Default	1.0	Units	s
Type	16 Bit User Save	Update Rate	4ms read
Display Format	Standard	Decimal Places	1
Coding	RW, BU		

See *BC Brake Release* (12.040).

Parameter	**12.047 *BC Post-brake Release Delay***		
Short description	Defines the post-brake release delay		
Mode	RFC-A		
Minimum	0.0	Maximum	25.0
Default	1.0	Units	s
Type	16 Bit User Save	Update Rate	4ms read
Display Format	Standard	Decimal Places	1
Coding	RW, BU		

See *BC Brake Release* (12.040).

Parameter	12.050 *BC Initial Direction*		
Short description	Defines the initial direction of the brake		
Mode	RFC-A		
Minimum	0	Maximum	2
Default	0	Units	
Type	8 Bit User Save	Update Rate	4ms read
Display Format	Standard	Decimal Places	0
Coding	RW, TE		

Value	*Text*
0	Ref
1	Forward
2	Reverse

See *BC Brake Release* (12.040).

Parameter	12.051 *BC Brake Apply Through Zero Threshold*		
Short description	Defines if the brake is applied through zero threshold		
Mode	RFC-A		
Minimum	0.00	Maximum	20.00
Default	1.00	Units	Hz
Type	16 Bit User Save	Update Rate	4ms read
Display Format	Standard	Decimal Places	2
Coding	RW, BU		

See *BC Brake Release* (12.040).

Menu 14 Single Line Descriptions − *User PID Controller*

Mode: RFC-A

Parameter		Range	Default	Type					
14.001	PID1 Output	±100.00 %		RO	Num	ND	NC	PT	
14.002	PID1 Feed-forward Reference Source	0.000 to 30.999	0.000	RW	Num			PT	US
14.003	PID1 Reference Source	0.000 to 30.999	0.000	RW	Num			PT	US
14.004	PID1 Feedback Source	0.000 to 30.999	0.000	RW	Num			PT	US
14.005	PID1 Reference Invert	Off (0) or On (1)	Off (0)	RW	Bit				US
14.006	PID1 Feedback Invert	Off (0) or On (1)	Off (0)	RW	Bit				US
14.007	PID1 Reference Slew Rate	0.0 to 3200.0 s	0.0 s	RW	Num				US
14.008	PID1 Enable	Off (0) or On (1)	Off (0)	RW	Bit				US
14.009	PID1 Enable Source 1	0.000 to 30.999	0.000	RW	Num			PT	US
14.010	PID1 Proportional Gain	0.000 to 4.000	1.000	RW	Num				US
14.011	PID1 Integral Gain	0.000 to 4.000	0.500	RW	Num				US
14.012	PID1 Differential Gain	0.000 to 4.000	0.000	RW	Num				US
14.013	PID1 Output Upper Limit	0.00 to 100.00 %	100.00 %	RW	Num				US
14.014	PID1 Output Lower Limit	±100.00 %	-100.00 %	RW	Num				US
14.015	PID1 Output Scaling	0.000 to 4.000	1.000	RW	Num				US
14.016	PID1 Destination	0.000 to 30.999	0.000	RW	Num	DE		PT	US
14.017	PID1 Integral Hold	Off (0) or On (1)	Off (0)	RW	Bit				
14.018	PID1 Symmetrical Limit Enable	Off (0) or On (1)	Off (0)	RW	Bit				US
14.019	PID1 Feed-forward Reference	±100.00 %		RO	Num	ND	NC	PT	
14.020	PID1 Reference	±100.00 %		RO	Num	ND	NC	PT	
14.021	PID1 Feedback	±100.00 %		RO	Num	ND	NC	PT	
14.022	PID1 Error	±100.00 %		RO	Num	ND	NC	PT	
14.023	PID1 Reference Scaling	0.000 to 4.000	1.000	RW	Num				US
14.024	PID1 Feedback Scaling	0.000 to 4.000	1.000	RW	Num				US
14.025	PID1 Digital Reference	±100.00 %	0.00 %	RW	Num				US
14.026	PID1 Digital Feedback	±100.00 %	0.00 %	RW	Num				US
14.027	PID1 Enable Source 2	0.000 to 30.999	0.000	RW	Num			PT	US

RW	Read / Write	RO	Read-only	Bit	Bit parameter	Txt	Text string	Date	Date parameter	Time	Time parameter
Chr	Character parameter	Bin	Binary parameter	IP	IP address	Mac	MAC address	Ver	Version number	SMP	Slot, menu, parameter
Num	Number parameter	DE	Destination	ND	No default value	RA	Rating dependent	NC	Non-copyable	PT	Protected
FI	Filtered	US	User save	PS	Power-down save						

Menu 14 − *User PID Controller*

Mode: RFC-A

PID controller

One general purpose PID controller is provided as shown in the diagram below. The sample rate for the PID controller is always 4ms.

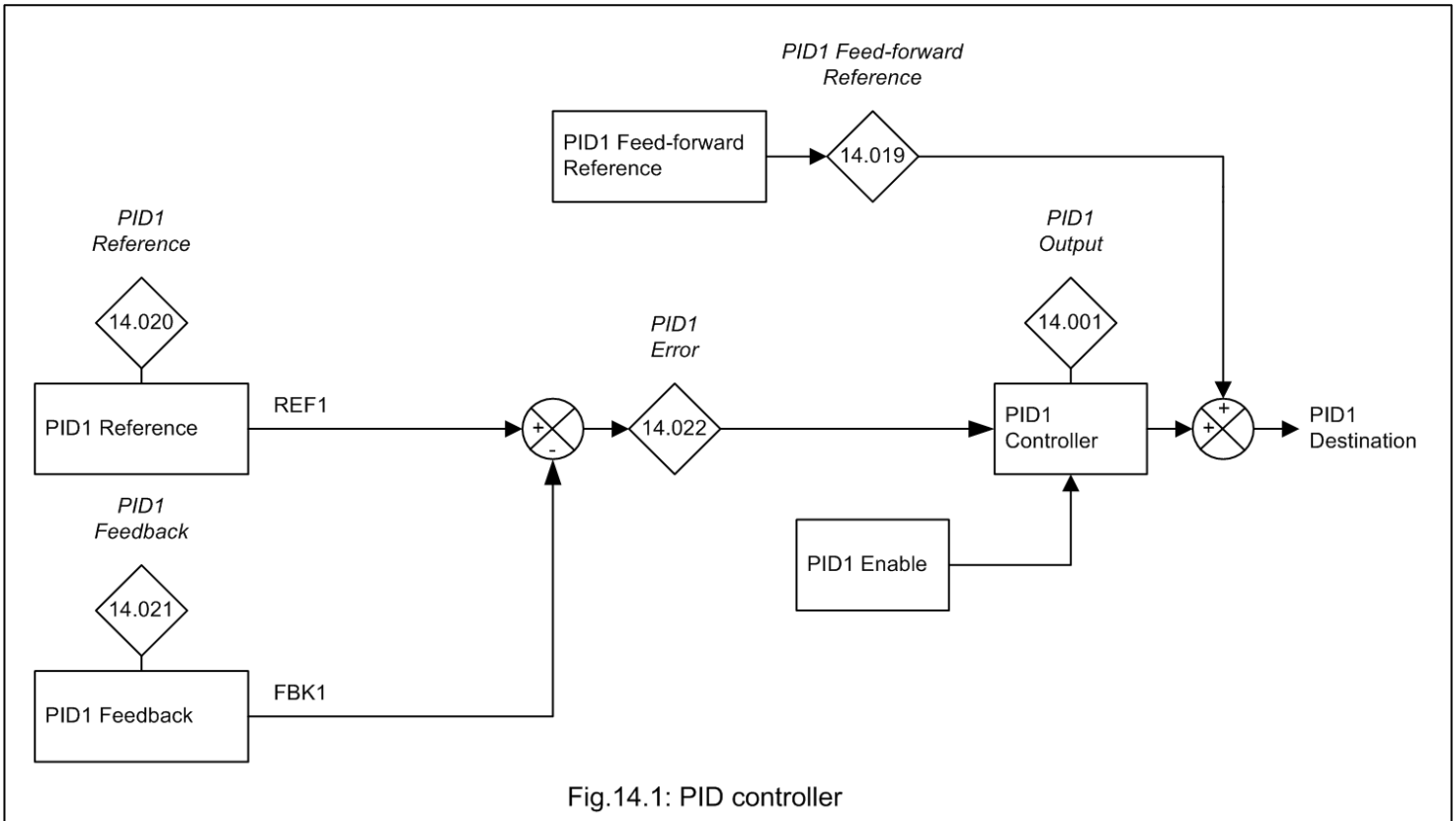

Fig.14.1: PID controller

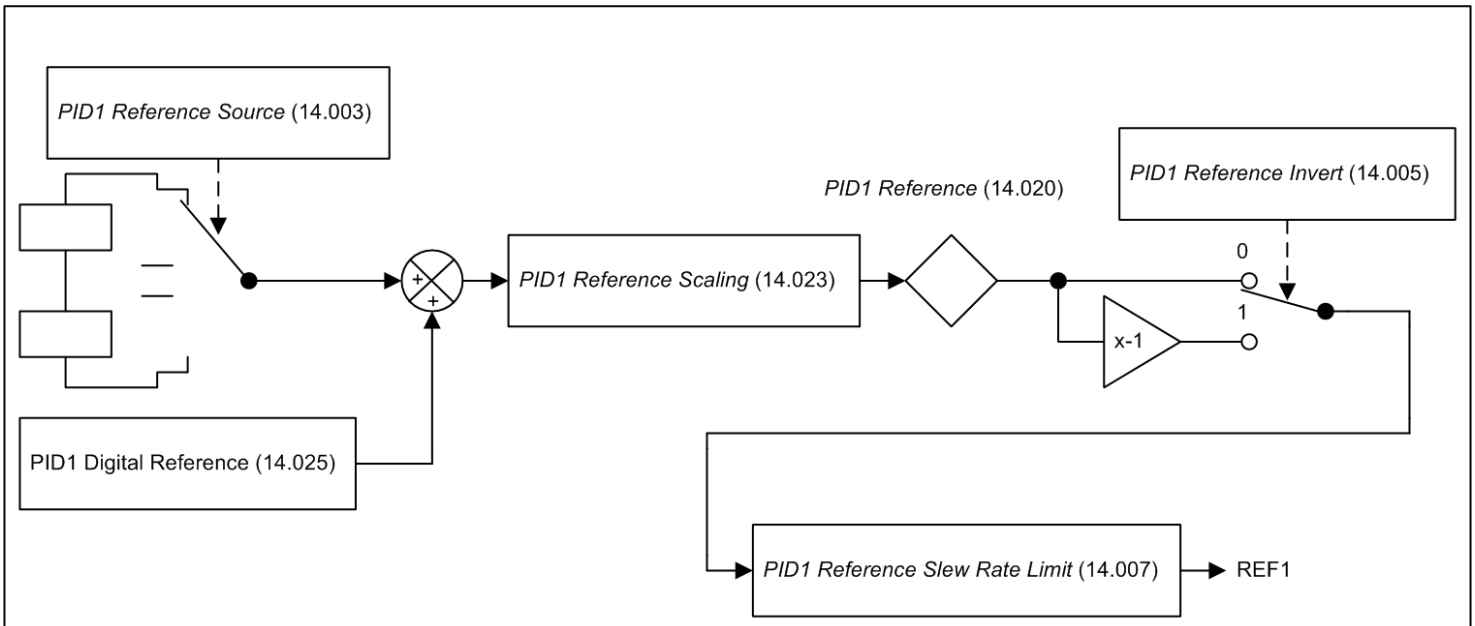

Fig.14.2: PID references

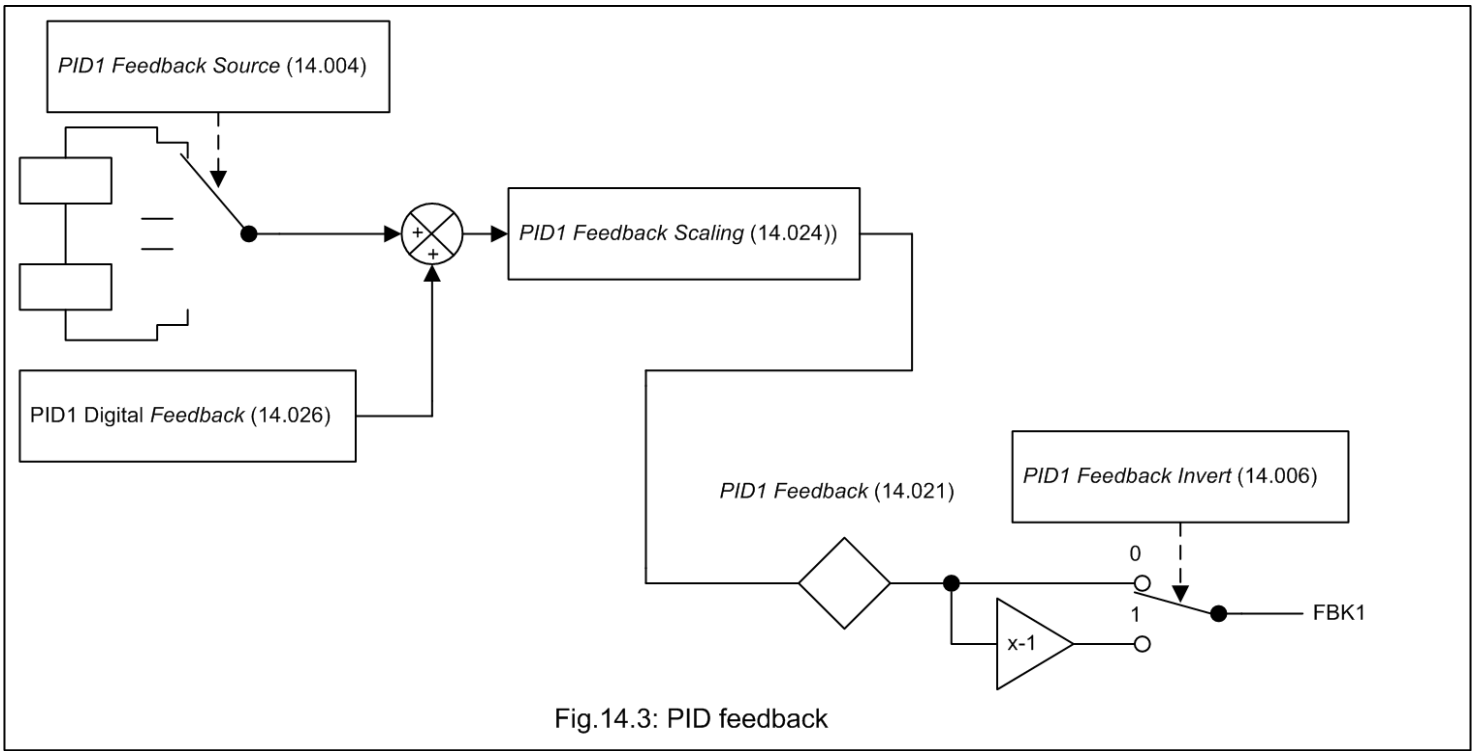

Fig.14.3: PID feedback

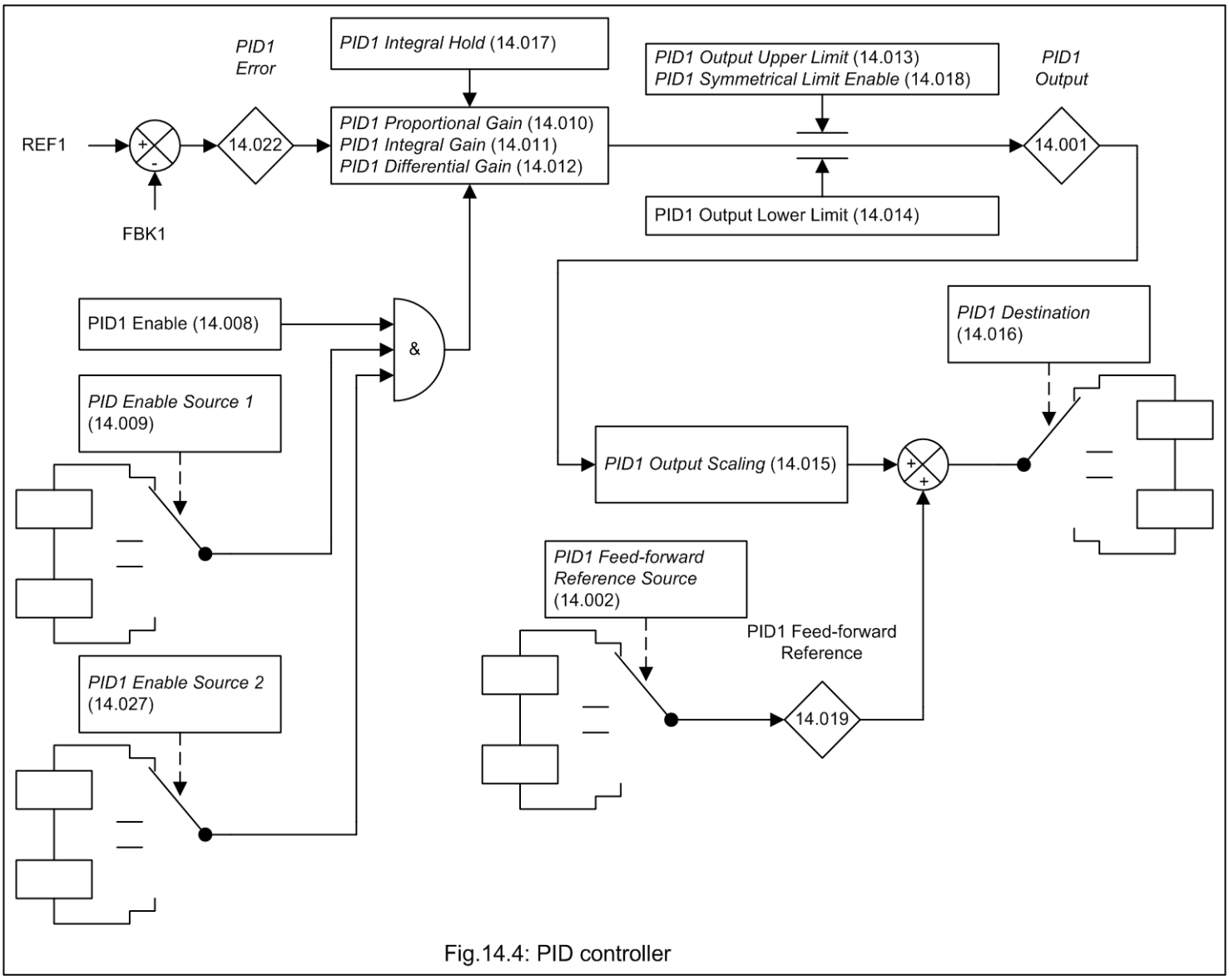

Fig.14.4: PID controller

Parameter	14.001 *PID1 Output*		
Short description	Displays the output for PID1		
Mode	RFC-A		
Minimum	-100.00	Maximum	100.00
Default		Units	%
Type	16 Bit Volatile	Update Rate	4ms write
Display Format	Standard	Decimal Places	2
Coding	RO, ND, NC, PT		

Controller

The controller section for the PID controller is shown in the introduction. If the enable is active the PID controller is active even if the destination is not routed to a valid parameter or set to 0.000. It should be noted that if either of the enable sources is routed to 0.000 or to a non-valid parameter the source value is taken as 1, therefore with default settings, *PID1 Enable Source 1* (14.009) = 0.000 and *PID1 Enable Source 2* (14.027) = 0.000, the PID controller can be enabled by simply setting *PID1 Enable* (14.008).

PID1 Error (14.022) is the difference between the reference and feedback produced by the reference and feedback systems described in *PID1 Reference Source* (14.003) and *PID1 Feedback Source* (14.004). The PID controller output is defined as follows:

PID1 Output (14.001) = *PID1 Error* (14.022) x [Kp + Ki/s + sKd/(0.064s + 1)]

Kp = *PID1 Proportional Gain* (14.010)

Ki = *PID1 Integral Gain* (14.011)

Kd = *PID1 Differential Gain* (14.012)

Therefore:

1. If *PID1 Error* (14.022) = 100.00% the proportional term gives a value of 100.00% if *PID1 Proportional Gain* (14.010) = 1.000.

2. If *PID1 Error* (14.022) = 100.00% the integral term gives a value that increases linearly by 100.00% per second if *PID1 Integral Gain* (14.011) = 1.000.

3. If *PID1 Error* (14.022) increases linearly by 100.00% per second the differential term gives a value of 100.00% if *PID1 Differential Gain* (14.012) = 1.000. (A filter with a time constant of 64ms is provided on the differential term to reduce the noise produced by this term).

The output may be limited to a range that is less than the maximum range of *PID1 Output* (14.001) using *PID1 Output Upper Limit* (14.013) and *PID1 Output Lower Limit* (14.014). If *PID1 Output Lower Limit* (14.014) > *PID1 Output Upper Limit* (14.013) then the output is held at the value defined by *PID1 Output Upper Limit* (14.013). If *PID1 Symmetrical Limit Enable* (14.018) = 1 then the lower limit = -(*PID1 Output Upper Limit* (14.013)). If the output reaches either of these limits the integral term accumulator is frozen until the output moves away from the limit to prevent integral wind-up. The integral hold function can also be enabled by the user by setting *PID1 Integral Hold* (14.017) = 1.

PID1 Output Scaling (14.015) can be used to scale the output, which is limited to a range from -100.00% to 100.00% after this function. The output is then added to *PID1 Feed-forward Reference* (14.019) and is again limited to the range from -100.00% to 100.00% before being routed to the destination defined by *PID1 Destination* (14.016).

Parameter	14.002 *PID1 Feed-forward Reference Source*		
Short description	Defines the input source for the feed-forwards reference source for PID1		
Mode	RFC-A		
Minimum	0.000	Maximum	30.999
Default	0.000	Units	
Type	16 Bit User Save	Update Rate	Drive reset read
Display Format	Standard	Decimal Places	3
Coding	RW, PT, BU		

See *PID1 Output* (14.001) and *User PID Controller* (14).

Parameter	14.003 *PID1 Reference Source*		
Short description	Defines the input source for the reference for PID1		
Mode	RFC-A		
Minimum	0.000	Maximum	30.999
Default	0.000	Units	
Type	16 Bit User Save	Update Rate	Drive reset read
Display Format	Standard	Decimal Places	3
Coding	RW, PT, BU		

The reference section for the PID controller is shown in the introduction. The reference section is always active even if the PID controller itself is disabled or the reference source is not routed to a valid parameter. If a reference source is not a valid parameter or is 0.000 then the value is taken as zero.

The reference is multiplied by *PID1 Reference Scaling* (14.023) and then limited to +/-100.00%. The reference can then be inverted if required (*PID1 Reference Invert* (14.005) = 1) and then a slew rate limit is applied with *PID1 Reference Slew Rate* (14.007). This limits the maximum rate of change so that a change from 0.00 to 100.00% takes the time given in *PID1 Reference Slew Rate* (14.007).

Parameter	14.004 *PID1 Feedback Source*		
Short description	Defines the input source for the feedback for PID1		
Mode	RFC-A		
Minimum	0.000	Maximum	30.999
Default	0.000	Units	
Type	16 Bit User Save	Update Rate	Drive reset read
Display Format	Standard	Decimal Places	3
Coding	RW, PT, BU		

The feedback section for the PID controller is shown in the introduction. The feedback section is always active even if the PID controller itself is disabled or the feedback source is not routed to a valid parameter. If a reference source is not a valid parameter or is 0.000 then the value is taken as zero.

The feedback is the sum of the feedback source and the *PID1 Digital Feedback* (14.026). The result is multiplied by *PID1 Feedback Scaling* (14.024) and then limited to +/-100.00%. The feedback can be inverted if required (*PID1 Feedback Invert* (14.006) = 1).

Parameter	14.005 *PID1 Reference Invert*		
Short description	Set to 1 to invert PID1 reference		
Mode	RFC-A		
Minimum	0	Maximum	1
Default	0	Units	
Type	1 Bit User Save	Update Rate	4ms read
Display Format	Standard	Decimal Places	0
Coding	RW		

See *PID1 Reference Source* (14.003).

Parameter	14.006 *PID1 Feedback Invert*		
Short description	Set to 1 to invert the PID1 feedback		
Mode	RFC-A		
Minimum	0	Maximum	1
Default	0	Units	
Type	1 Bit User Save	Update Rate	4ms read
Display Format	Standard	Decimal Places	0
Coding	RW		

See *PID1 Feedback Source* (14.004).

Parameter	14.007 *PID1 Reference Slew Rate*		
Short description	Defines the rate in change of output for PID1		
Mode	RFC-A		
Minimum	0.0	Maximum	3200.0
Default	0.0	Units	s
Type	16 Bit User Save	Update Rate	Background read
Display Format	Standard	Decimal Places	1
Coding	RW		

See *PID1 Reference Source* (14.003).

Parameter	14.008 *PID1 Enable*		
Short description	Enables the use of PID1		
Mode	RFC-A		
Minimum	0	Maximum	1
Default	0	Units	
Type	1 Bit User Save	Update Rate	4ms read
Display Format	Standard	Decimal Places	0
Coding	RW		

See *PID1 Output* (14.001) and *User PID Controller* (14).

Parameter	14.009 *PID1 Enable Source 1*		
Short description	Defines the input source for enabling PID1		
Mode	RFC-A		
Minimum	0.000	Maximum	30.999
Default	0.000	Units	
Type	16 Bit User Save	Update Rate	Drive reset read
Display Format	Standard	Decimal Places	3
Coding	RW, PT, BU		

See *PID1 Output* (14.001) and *User PID Controller* (14).

Parameter	14.010 *PID1 Proportional Gain*		
Short description	Defines the Kp gain used for PID1		
Mode	RFC-A		
Minimum	0.000	Maximum	4.000
Default	1.000	Units	
Type	16 Bit User Save	Update Rate	Background read
Display Format	Standard	Decimal Places	3
Coding	RW		

See *PID1 Output* (14.001).

Parameter	14.011 *PID1 Integral Gain*		
Short description	Defines the Ki gain used for PID1		
Mode	RFC-A		
Minimum	0.000	Maximum	4.000
Default	0.500	Units	
Type	16 Bit User Save	Update Rate	Background read
Display Format	Standard	Decimal Places	3
Coding	RW		

See *PID1 Output* (14.001).

Parameter	14.012 *PID1 Differential Gain*		
Short description	Defines the Kd gain used for PID1		
Mode	RFC-A		
Minimum	0.000	Maximum	4.000
Default	0.000	Units	
Type	16 Bit User Save	Update Rate	Background read
Display Format	Standard	Decimal Places	3
Coding	RW		

See *PID1 Output* (14.001).

Parameter	14.013 *PID1 Output Upper Limit*		
Short description	Defines the maximum value of the output for PID1		
Mode	RFC-A		
Minimum	0.00	Maximum	100.00
Default	100.00	Units	%
Type	16 Bit User Save	Update Rate	4ms read
Display Format	Standard	Decimal Places	2
Coding	RW		

See *PID1 Output* (14.001).

Parameter	14.014 *PID1 Output Lower Limit*		
Short description	Defines the minimum value of the output for PID1		
Mode	RFC-A		
Minimum	-100.00	Maximum	100.00
Default	-100.00	Units	%
Type	16 Bit User Save	Update Rate	4ms read
Display Format	Standard	Decimal Places	2
Coding	RW		

See *PID1 Output* (14.001).

Parameter	14.015 *PID1 Output Scaling*		
Short description	Defines the scaling factor of the output for PID1		
Mode	RFC-A		
Minimum	0.000	Maximum	4.000
Default	1.000	Units	
Type	16 Bit User Save	Update Rate	4ms read
Display Format	Standard	Decimal Places	3
Coding	RW		

See *PID1 Output* (14.001) and *User PID Controller* (14).

Parameter	14.016 *PID1 Destination*		
Short description	Defines the output parameter for PID1		
Mode	RFC-A		
Minimum	0.000	Maximum	30.999
Default	0.000	Units	
Type	16 Bit User Save	Update Rate	Drive reset read
Display Format	Standard	Decimal Places	3
Coding	RW, DE, PT, BU		

See *PID1 Output* (14.001) and *User PID Controller* (14).

Parameter	14.017 *PID1 Integral Hold*		
Short description	Enables the integral hold function for PID1		
Mode	RFC-A		
Minimum	0	Maximum	1
Default	0	Units	
Type	1 Bit Volatile	Update Rate	4ms read
Display Format	Standard	Decimal Places	0
Coding	RW		

See *PID1 Output* (14.001) and *User PID Controller* (14).

Parameter	14.018 *PID1 Symmetrical Limit Enable*		
Short description	Enables the symmetrical limit for PID1		
Mode	RFC-A		
Minimum	0	Maximum	1
Default	0	Units	
Type	1 Bit User Save	Update Rate	Background read
Display Format	Standard	Decimal Places	0
Coding	RW		

See *PID1 Output* (14.001) and *User PID Controller* (14).

Parameter	14.019 *PID1 Feed-forward Reference*		
Short description	Displays the value of the feed-forwards reference for PID1		
Mode	RFC-A		
Minimum	-100.00	Maximum	100.00
Default		Units	%
Type	16 Bit Volatile	Update Rate	4ms write
Display Format	Standard	Decimal Places	2
Coding	RO, ND, NC, PT		

See *PID1 Output* (14.001) and *User PID Controller* (14).

Parameter	14.020 *PID1 Reference*		
Short description	Displays the value of the reference for PID1		
Mode	RFC-A		
Minimum	-100.00	Maximum	100.00
Default		Units	%
Type	16 Bit Volatile	Update Rate	4ms write
Display Format	Standard	Decimal Places	2
Coding	RO, ND, NC, PT		

See *PID1 Reference Source* (14.003) and *User PID Controller* (14).

Parameter	14.021 *PID1 Feedback*		
Short description	Displays the value of the feedback for PID1		
Mode	RFC-A		
Minimum	-100.00	Maximum	100.00
Default		Units	%
Type	16 Bit Volatile	Update Rate	4ms write
Display Format	Standard	Decimal Places	2
Coding	RO, ND, NC, PT		

See *PID1 Feedback Source* (14.004) and *User PID Controller* (14).

Parameter	14.022 *PID1 Error*		
Short description	Displays the value of the error for PID1		
Mode	RFC-A		
Minimum	-100.00	Maximum	100.00
Default		Units	%
Type	16 Bit Volatile	Update Rate	4ms write
Display Format	Standard	Decimal Places	2
Coding	RO, ND, NC, PT		

See *PID1 Output* (14.001) and *User PID Controller* (14).

Parameter	14.023 *PID1 Reference Scaling*		
Short description	Defines the scaling factor for the reference for PID1		
Mode	RFC-A		
Minimum	0.000	Maximum	4.000
Default	1.000	Units	
Type	16 Bit User Save	Update Rate	4ms read
Display Format	Standard	Decimal Places	3
Coding	RW		

See *PID1 Reference Source* (14.003) and *User PID Controller* (14).

Parameter	14.024 *PID1 Feedback Scaling*		
Short description	Defines the scaling factor of the feedback for PID1		
Mode	RFC-A		
Minimum	0.000	Maximum	4.000
Default	1.000	Units	
Type	16 Bit User Save	Update Rate	4ms read
Display Format	Standard	Decimal Places	3
Coding	RW		

See *PID1 Feedback Source* (14.004) and *User PID Controller* (14).

Parameter	14.025 *PID1 Digital Reference*		
Short description	Defines the value of the digital reference for PID1		
Mode	RFC-A		
Minimum	-100.00	Maximum	100.00
Default	0.00	Units	%
Type	16 Bit User Save	Update Rate	4ms read
Display Format	Standard	Decimal Places	2
Coding	RW		

See *PID1 Reference Source* (14.003).

Parameter	14.026 *PID1 Digital Feedback*		
Short description	Defines the value of the digital feedback for PID1		
Mode	RFC-A		
Minimum	-100.00	Maximum	100.00
Default	0.00	Units	%
Type	16 Bit User Save	Update Rate	4ms read
Display Format	Standard	Decimal Places	2
Coding	RW		

See *PID1 Feedback Source* (14.004).

Parameter	14.027 *PID1 Enable Source 2*		
Short description	Defines the input source for enabling PID1		
Mode	RFC-A		
Minimum	0.000	Maximum	30.999
Default	0.000	Units	
Type	16 Bit User Save	Update Rate	Drive reset read
Display Format	Standard	Decimal Places	3
Coding	RW, PT, BU		

See *PID1 Output* (14.001) and *User PID Controller* (14).

Menu 18 Single Line Descriptions − *Application Menu 1*

Mode: RFC-A

Parameter		Range	Default	Type					
18.001	Application Menu 1 Power-down Save Integer	-32768 to 32767	0	RW	Num				PS
18.002	Application Menu 1 Read-only Integer 2	-32768 to 32767		RO	Num	ND	NC		
18.003	Application Menu 1 Read-only Integer 3	-32768 to 32767		RO	Num	ND	NC		
18.004	Application Menu 1 Read-only Integer 4	-32768 to 32767		RO	Num	ND	NC		
18.005	Application Menu 1 Read-only Integer 5	-32768 to 32767		RO	Num	ND	NC		
18.006	Application Menu 1 Read-only Integer 6	-32768 to 32767		RO	Num	ND	NC		
18.007	Application Menu 1 Read-only Integer 7	-32768 to 32767		RO	Num	ND	NC		
18.008	Application Menu 1 Read-only Integer 8	-32768 to 32767		RO	Num	ND	NC		
18.009	Application Menu 1 Read-only Integer 9	-32768 to 32767		RO	Num	ND	NC		
18.010	Application Menu 1 Read-only Integer 10	-32768 to 32767		RO	Num	ND	NC		
18.011	Application Menu 1 Read-write Integer 11	-32768 to 32767	0	RW	Num				US
18.012	Application Menu 1 Read-write Integer 12	-32768 to 32767	0	RW	Num				US
18.013	Application Menu 1 Read-write Integer 13	-32768 to 32767	0	RW	Num				US
18.014	Application Menu 1 Read-write Integer 14	-32768 to 32767	0	RW	Num				US
18.015	Application Menu 1 Read-write Integer 15	-32768 to 32767	0	RW	Num				US
18.016	Application Menu 1 Read-write Integer 16	-32768 to 32767	0	RW	Num				US
18.017	Application Menu 1 Read-write Integer 17	-32768 to 32767	0	RW	Num				US
18.018	Application Menu 1 Read-write Integer 18	-32768 to 32767	0	RW	Num				US
18.019	Application Menu 1 Read-write Integer 19	-32768 to 32767	0	RW	Num				US
18.020	Application Menu 1 Read-write Integer 20	-32768 to 32767	0	RW	Num				US
18.021	Application Menu 1 Read-write Integer 21	-32768 to 32767	0	RW	Num				US
18.022	Application Menu 1 Read-write Integer 22	-32768 to 32767	0	RW	Num				US
18.023	Application Menu 1 Read-write Integer 23	-32768 to 32767	0	RW	Num				US
18.024	Application Menu 1 Read-write Integer 24	-32768 to 32767	0	RW	Num				US
18.025	Application Menu 1 Read-write Integer 25	-32768 to 32767	0	RW	Num				US
18.026	Application Menu 1 Read-write Integer 26	-32768 to 32767	0	RW	Num				US
18.027	Application Menu 1 Read-write Integer 27	-32768 to 32767	0	RW	Num				US
18.028	Application Menu 1 Read-write Integer 28	-32768 to 32767	0	RW	Num				US
18.029	Application Menu 1 Read-write Integer 29	-32768 to 32767	0	RW	Num				US
18.030	Application Menu 1 Read-write Integer 30	-32768 to 32767	0	RW	Num				US
18.031	Application Menu 1 Read-write bit 31	Off (0) or On (1)	Off (0)	RW	Bit				US
18.032	Application Menu 1 Read-write bit 32	Off (0) or On (1)	Off (0)	RW	Bit				US
18.033	Application Menu 1 Read-write bit 33	Off (0) or On (1)	Off (0)	RW	Bit				US
18.034	Application Menu 1 Read-write bit 34	Off (0) or On (1)	Off (0)	RW	Bit				US
18.035	Application Menu 1 Read-write bit 35	Off (0) or On (1)	Off (0)	RW	Bit				US
18.036	Application Menu 1 Read-write bit 36	Off (0) or On (1)	Off (0)	RW	Bit				US
18.037	Application Menu 1 Read-write bit 37	Off (0) or On (1)	Off (0)	RW	Bit				US
18.038	Application Menu 1 Read-write bit 38	Off (0) or On (1)	Off (0)	RW	Bit				US
18.039	Application Menu 1 Read-write bit 39	Off (0) or On (1)	Off (0)	RW	Bit				US
18.040	Application Menu 1 Read-write bit 40	Off (0) or On (1)	Off (0)	RW	Bit				US
18.041	Application Menu 1 Read-write bit 41	Off (0) or On (1)	Off (0)	RW	Bit				US
18.042	Application Menu 1 Read-write bit 42	Off (0) or On (1)	Off (0)	RW	Bit				US
18.043	Application Menu 1 Read-write bit 43	Off (0) or On (1)	Off (0)	RW	Bit				US
18.044	Application Menu 1 Read-write bit 44	Off (0) or On (1)	Off (0)	RW	Bit				US
18.045	Application Menu 1 Read-write bit 45	Off (0) or On (1)	Off (0)	RW	Bit				US
18.046	Application Menu 1 Read-write bit 46	Off (0) or On (1)	Off (0)	RW	Bit				US
18.047	Application Menu 1 Read-write bit 47	Off (0) or On (1)	Off (0)	RW	Bit				US
18.048	Application Menu 1 Read-write bit 48	Off (0) or On (1)	Off (0)	RW	Bit				US
18.049	Application Menu 1 Read-write bit 49	Off (0) or On (1)	Off (0)	RW	Bit				US
18.050	Application Menu 1 Read-write bit 50	Off (0) or On (1)	Off (0)	RW	Bit				US

RW	Read / Write	RO	Read-only	Bit	Bit parameter	Txt	Text string	Date	Date parameter	Time	Time parameter
Chr	Character parameter	Bin	Binary parameter	IP	IP address	Mac	MAC address	Ver	Version number	SMP	Slot, menu, parameter
Num	Number parameter	DE	Destination	ND	No default value	RA	Rating dependent	NC	Non-copyable	PT	Protected
FI	Filtered	US	User save	PS	Power-down save						

Menu 18 − *Application Menu 1*

Mode: RFC-A

General option module application menus

Menus 18 and 20 are general application menus that can be used by one of the option modules fitted to the drive. These menus are customisable and the following RAM is provided to be shared between the 2 menus.

	1	8	16	32
Volatile	0	0	8	9
User save	19	0	19	0
Power-down save	0	0	1	0

If no option modules provide customisation tables for these menus then the drive provides the customisation tables to give the following parameters.

Parameter	**18.001** ***Application Menu 1 Power-down Save Integer***		
Short description	General power-down save integer application parameter		
Mode	RFC-A		
Minimum	-32768	Maximum	32767
Default	0	Units	
Type	16 Bit Power Down Save	Update Rate	N/A
Display Format	Standard	Decimal Places	0
Coding	RW		

Parameter	**18.002** ***Application Menu 1 Read-only Integer 2***		
Short description	General read-only integer application parameter		
Mode	RFC-A		
Minimum	-32768	Maximum	32767
Default		Units	
Type	16 Bit Volatile	Update Rate	N/A
Display Format	Standard	Decimal Places	0
Coding	RO, PR, ND, NC		

Parameter	**18.003** ***Application Menu 1 Read-only Integer 3***		
Short description	General read-only integer application parameter		
Mode	RFC-A		
Minimum	-32768	Maximum	32767
Default		Units	
Type	16 Bit Volatile	Update Rate	N/A
Display Format	Standard	Decimal Places	0
Coding	RO, PR, ND, NC		

Parameter	**18.004** ***Application Menu 1 Read-only Integer 4***		
Short description	General read-only integer application parameter		
Mode	RFC-A		
Minimum	-32768	Maximum	32767
Default		Units	
Type	16 Bit Volatile	Update Rate	N/A
Display Format	Standard	Decimal Places	0
Coding	RO, PR, ND, NC		

Parameter	**18.005** ***Application Menu 1 Read-only Integer 5***		
Short description	General read-only integer application parameter		
Mode	RFC-A		
Minimum	-32768	Maximum	32767
Default		Units	
Type	16 Bit Volatile	Update Rate	N/A
Display Format	Standard	Decimal Places	0
Coding	RO, PR, ND, NC		

Parameter	18.006 *Application Menu 1 Read-only Integer 6*		
Short description	General read-only integer application parameter		
Mode	RFC-A		
Minimum	-32768	Maximum	32767
Default		Units	
Type	16 Bit Volatile	Update Rate	N/A
Display Format	Standard	Decimal Places	0
Coding	RO, PR, ND, NC		

Parameter	18.007 *Application Menu 1 Read-only Integer 7*		
Short description	General read-only integer application parameter		
Mode	RFC-A		
Minimum	-32768	Maximum	32767
Default		Units	
Type	16 Bit Volatile	Update Rate	N/A
Display Format	Standard	Decimal Places	0
Coding	RO, PR, ND, NC		

Parameter	18.008 *Application Menu 1 Read-only Integer 8*		
Short description	General read-only integer application parameter		
Mode	RFC-A		
Minimum	-32768	Maximum	32767
Default		Units	
Type	16 Bit Volatile	Update Rate	N/A
Display Format	Standard	Decimal Places	0
Coding	RO, PR, ND, NC		

Parameter	18.009 *Application Menu 1 Read-only Integer 9*		
Short description	General read-only integer application parameter		
Mode	RFC-A		
Minimum	-32768	Maximum	32767
Default		Units	
Type	16 Bit Volatile	Update Rate	N/A
Display Format	Standard	Decimal Places	0
Coding	RO, PR, ND, NC		

Parameter	18.010 *Application Menu 1 Read-only Integer 10*		
Short description	General read-only integer application parameter		
Mode	RFC-A		
Minimum	-32768	Maximum	32767
Default		Units	
Type	16 Bit Volatile	Update Rate	N/A
Display Format	Standard	Decimal Places	0
Coding	RO, PR, ND, NC		

Parameter	18.011 *Application Menu 1 Read-write Integer 11*		
Short description	General read-write integer application parameter		
Mode	RFC-A		
Minimum	-32768	Maximum	32767
Default	0	Units	
Type	16 Bit User Save	Update Rate	N/A
Display Format	Standard	Decimal Places	0
Coding	RW		

Parameter	18.012 *Application Menu 1 Read-write Integer 12*		
Short description	General read-write integer application parameter		
Mode	RFC-A		
Minimum	-32768	Maximum	32767
Default	0	Units	
Type	16 Bit User Save	Update Rate	N/A
Display Format	Standard	Decimal Places	0
Coding	RW		

Parameter	18.013 *Application Menu 1 Read-write Integer 13*		
Short description	General read-write integer application parameter		
Mode	RFC-A		
Minimum	-32768	Maximum	32767
Default	0	Units	
Type	16 Bit User Save	Update Rate	N/A
Display Format	Standard	Decimal Places	0
Coding	RW		

Parameter	18.014 *Application Menu 1 Read-write Integer 14*		
Short description	General read-write integer application parameter		
Mode	RFC-A		
Minimum	-32768	Maximum	32767
Default	0	Units	
Type	16 Bit User Save	Update Rate	N/A
Display Format	Standard	Decimal Places	0
Coding	RW		

Parameter	18.015 *Application Menu 1 Read-write Integer 15*		
Short description	General read-write integer application parameter		
Mode	RFC-A		
Minimum	-32768	Maximum	32767
Default	0	Units	
Type	16 Bit User Save	Update Rate	N/A
Display Format	Standard	Decimal Places	0
Coding	RW		

Parameter	18.016 *Application Menu 1 Read-write Integer 16*		
Short description	General read-write integer application parameter		
Mode	RFC-A		
Minimum	-32768	Maximum	32767
Default	0	Units	
Type	16 Bit User Save	Update Rate	N/A
Display Format	Standard	Decimal Places	0
Coding	RW		

Parameter	18.017 *Application Menu 1 Read-write Integer 17*		
Short description	General read-write integer application parameter		
Mode	RFC-A		
Minimum	-32768	Maximum	32767
Default	0	Units	
Type	16 Bit User Save	Update Rate	N/A
Display Format	Standard	Decimal Places	0
Coding	RW		

Parameter	18.018 *Application Menu 1 Read-write Integer 18*		
Short description	General read-write integer application parameter		
Mode	RFC-A		
Minimum	-32768	Maximum	32767
Default	0	Units	
Type	16 Bit User Save	Update Rate	N/A
Display Format	Standard	Decimal Places	0
Coding	RW		

Parameter	18.019 *Application Menu 1 Read-write Integer 19*		
Short description	General read-write integer application parameter		
Mode	RFC-A		
Minimum	-32768	Maximum	32767
Default	0	Units	
Type	16 Bit User Save	Update Rate	N/A
Display Format	Standard	Decimal Places	0
Coding	RW		

Parameter	18.020 *Application Menu 1 Read-write Integer 20*		
Short description	General read-write integer application parameter		
Mode	RFC-A		
Minimum	-32768	Maximum	32767
Default	0	Units	
Type	16 Bit User Save	Update Rate	N/A
Display Format	Standard	Decimal Places	0
Coding	RW		

Parameter	18.021 *Application Menu 1 Read-write Integer 21*		
Short description	General read-write integer application parameter		
Mode	RFC-A		
Minimum	-32768	Maximum	32767
Default	0	Units	
Type	16 Bit User Save	Update Rate	N/A
Display Format	Standard	Decimal Places	0
Coding	RW		

Parameter	18.022 *Application Menu 1 Read-write Integer 22*		
Short description	General read-write integer application parameter		
Mode	RFC-A		
Minimum	-32768	Maximum	32767
Default	0	Units	
Type	16 Bit User Save	Update Rate	N/A
Display Format	Standard	Decimal Places	0
Coding	RW		

Parameter	18.023 *Application Menu 1 Read-write Integer 23*		
Short description	General read-write integer application parameter		
Mode	RFC-A		
Minimum	-32768	Maximum	32767
Default	0	Units	
Type	16 Bit User Save	Update Rate	N/A
Display Format	Standard	Decimal Places	0
Coding	RW		

Parameter	18.024 *Application Menu 1 Read-write Integer 24*		
Short description	General read-write integer application parameter		
Mode	RFC-A		
Minimum	-32768	Maximum	32767
Default	0	Units	
Type	16 Bit User Save	Update Rate	N/A
Display Format	Standard	Decimal Places	0
Coding	RW		

Parameter	18.025 *Application Menu 1 Read-write Integer 25*		
Short description	General read-write integer application parameter		
Mode	RFC-A		
Minimum	-32768	Maximum	32767
Default	0	Units	
Type	16 Bit User Save	Update Rate	N/A
Display Format	Standard	Decimal Places	0
Coding	RW		

Parameter	18.026 *Application Menu 1 Read-write Integer 26*		
Short description	General read-write integer application parameter		
Mode	RFC-A		
Minimum	-32768	Maximum	32767
Default	0	Units	
Type	16 Bit User Save	Update Rate	N/A
Display Format	Standard	Decimal Places	0
Coding	RW		

Parameter	18.027 *Application Menu 1 Read-write Integer 27*		
Short description	General read-write integer application parameter		
Mode	RFC-A		
Minimum	-32768	Maximum	32767
Default	0	Units	
Type	16 Bit User Save	Update Rate	N/A
Display Format	Standard	Decimal Places	0
Coding	RW		

Parameter	18.028 *Application Menu 1 Read-write Integer 28*		
Short description	General read-write integer application parameter		
Mode	RFC-A		
Minimum	-32768	Maximum	32767
Default	0	Units	
Type	16 Bit User Save	Update Rate	N/A
Display Format	Standard	Decimal Places	0
Coding	RW		

Parameter	18.029 *Application Menu 1 Read-write Integer 29*		
Short description	General read-write integer application parameter		
Mode	RFC-A		
Minimum	-32768	Maximum	32767
Default	0	Units	
Type	16 Bit User Save	Update Rate	N/A
Display Format	Standard	Decimal Places	0
Coding	RW		

Parameter	18.030 *Application Menu 1 Read-write Integer 30*		
Short description	General read-write integer application parameter		
Mode	RFC-A		
Minimum	-32768	Maximum	32767
Default	0	Units	
Type	16 Bit User Save	Update Rate	N/A
Display Format	Standard	Decimal Places	0
Coding	RW		

Parameter	18.031 *Application Menu 1 Read-write bit 31*		
Short description	General read-write bit application parameter		
Mode	RFC-A		
Minimum	0	Maximum	1
Default	0	Units	
Type	1 Bit User Save	Update Rate	N/A
Display Format	Standard	Decimal Places	0
Coding	RW		

Parameter	18.032 *Application Menu 1 Read-write bit 32*		
Short description	General read-write bit application parameter		
Mode	RFC-A		
Minimum	0	Maximum	1
Default	0	Units	
Type	1 Bit User Save	Update Rate	N/A
Display Format	Standard	Decimal Places	0
Coding	RW		

Parameter	18.033 *Application Menu 1 Read-write bit 33*		
Short description	General read-write bit application parameter		
Mode	RFC-A		
Minimum	0	Maximum	1
Default	0	Units	
Type	1 Bit User Save	Update Rate	N/A
Display Format	Standard	Decimal Places	0
Coding	RW		

Parameter	18.034 *Application Menu 1 Read-write bit 34*		
Short description	General read-write bit application parameter		
Mode	RFC-A		
Minimum	0	Maximum	1
Default	0	Units	
Type	1 Bit User Save	Update Rate	N/A
Display Format	Standard	Decimal Places	0
Coding	RW		

Parameter	18.035 *Application Menu 1 Read-write bit 35*		
Short description	General read-write bit application parameter		
Mode	RFC-A		
Minimum	0	Maximum	1
Default	0	Units	
Type	1 Bit User Save	Update Rate	N/A
Display Format	Standard	Decimal Places	0
Coding	RW		

Parameter	18.036 *Application Menu 1 Read-write bit 36*		
Short description	General read-write bit application parameter		
Mode	RFC-A		
Minimum	0	Maximum	1
Default	0	Units	
Type	1 Bit User Save	Update Rate	N/A
Display Format	Standard	Decimal Places	0
Coding	RW		

Parameter	18.037 *Application Menu 1 Read-write bit 37*		
Short description	General read-write bit application parameter		
Mode	RFC-A		
Minimum	0	Maximum	1
Default	0	Units	
Type	1 Bit User Save	Update Rate	N/A
Display Format	Standard	Decimal Places	0
Coding	RW		

Parameter	18.038 *Application Menu 1 Read-write bit 38*		
Short description	General read-write bit application parameter		
Mode	RFC-A		
Minimum	0	Maximum	1
Default	0	Units	
Type	1 Bit User Save	Update Rate	N/A
Display Format	Standard	Decimal Places	0
Coding	RW		

Parameter	18.039 *Application Menu 1 Read-write bit 39*		
Short description	General read-write bit application parameter		
Mode	RFC-A		
Minimum	0	Maximum	1
Default	0	Units	
Type	1 Bit User Save	Update Rate	N/A
Display Format	Standard	Decimal Places	0
Coding	RW		

Parameter	18.040 *Application Menu 1 Read-write bit 40*		
Short description	General read-write bit application parameter		
Mode	RFC-A		
Minimum	0	Maximum	1
Default	0	Units	
Type	1 Bit User Save	Update Rate	N/A
Display Format	Standard	Decimal Places	0
Coding	RW		

Parameter	18.041 *Application Menu 1 Read-write bit 41*		
Short description	General read-write bit application parameter		
Mode	RFC-A		
Minimum	0	Maximum	1
Default	0	Units	
Type	1 Bit User Save	Update Rate	N/A
Display Format	Standard	Decimal Places	0
Coding	RW		

Parameter	18.042 *Application Menu 1 Read-write bit 42*		
Short description	General read-write bit application parameter		
Mode	RFC-A		
Minimum	0	Maximum	1
Default	0	Units	
Type	1 Bit User Save	Update Rate	N/A
Display Format	Standard	Decimal Places	0
Coding	RW		

Parameter	18.043 *Application Menu 1 Read-write bit 43*		
Short description	General read-write bit application parameter		
Mode	RFC-A		
Minimum	0	Maximum	1
Default	0	Units	
Type	1 Bit User Save	Update Rate	N/A
Display Format	Standard	Decimal Places	0
Coding	RW		

Parameter	18.044 *Application Menu 1 Read-write bit 44*		
Short description	General read-write bit application parameter		
Mode	RFC-A		
Minimum	0	Maximum	1
Default	0	Units	
Type	1 Bit User Save	Update Rate	N/A
Display Format	Standard	Decimal Places	0
Coding	RW		

Parameter	18.045 *Application Menu 1 Read-write bit 45*		
Short description	General read-write bit application parameter		
Mode	RFC-A		
Minimum	0	Maximum	1
Default	0	Units	
Type	1 Bit User Save	Update Rate	N/A
Display Format	Standard	Decimal Places	0
Coding	RW		

Parameter	18.046 *Application Menu 1 Read-write bit 46*		
Short description	General read-write bit application parameter		
Mode	RFC-A		
Minimum	0	Maximum	1
Default	0	Units	
Type	1 Bit User Save	Update Rate	N/A
Display Format	Standard	Decimal Places	0
Coding	RW		

Parameter	18.047 *Application Menu 1 Read-write bit 47*		
Short description	General read-write bit application parameter		
Mode	RFC-A		
Minimum	0	Maximum	1
Default	0	Units	
Type	1 Bit User Save	Update Rate	N/A
Display Format	Standard	Decimal Places	0
Coding	RW		

Parameter	18.048 *Application Menu 1 Read-write bit 48*		
Short description	General read-write bit application parameter		
Mode	RFC-A		
Minimum	0	Maximum	1
Default	0	Units	
Type	1 Bit User Save	Update Rate	N/A
Display Format	Standard	Decimal Places	0
Coding	RW		

Parameter	18.049 *Application Menu 1 Read-write bit 49*		
Short description	General read-write bit application parameter		
Mode	RFC-A		
Minimum	0	Maximum	1
Default	0	Units	
Type	1 Bit User Save	Update Rate	N/A
Display Format	Standard	Decimal Places	0
Coding	RW		

Parameter	18.050 *Application Menu 1 Read-write bit 50*		
Short description	General read-write bit application parameter		
Mode	RFC-A		
Minimum	0	Maximum	1
Default	0	Units	
Type	1 Bit User Save	Update Rate	N/A
Display Format	Standard	Decimal Places	0
Coding	RW		

Menu 20 Single Line Descriptions − *Application Menu 2*

Mode: RFC-A

Parameter		Range	Default	Type					
20.021	Application Menu 3 Read-write Long Integer 21	-2147483648 to 2147483647	0	RW	Num				
20.022	Application Menu 3 Read-write Long Integer 22	-2147483648 to 2147483647	0	RW	Num				
20.023	Application Menu 3 Read-write Long Integer 23	-2147483648 to 2147483647	0	RW	Num				
20.024	Application Menu 3 Read-write Long Integer 24	-2147483648 to 2147483647	0	RW	Num				
20.025	Application Menu 3 Read-write Long Integer 25	-2147483648 to 2147483647	0	RW	Num				
20.026	Application Menu 3 Read-write Long Integer 26	-2147483648 to 2147483647	0	RW	Num				
20.027	Application Menu 3 Read-write Long Integer 27	-2147483648 to 2147483647	0	RW	Num				
20.028	Application Menu 3 Read-write Long Integer 28	-2147483648 to 2147483647	0	RW	Num				
20.029	Application Menu 3 Read-write Long Integer 29	-2147483648 to 2147483647	0	RW	Num				
20.030	Application Menu 3 Read-write Long Integer 30	-2147483648 to 2147483647	0	RW	Num				

RW	Read / Write	RO	Read-only	Bit	Bit parameter	Txt	Text string	Date	Date parameter	Time	Time parameter
Chr	Character parameter	Bin	Binary parameter	IP	IP address	Mac	MAC address	Ver	Version number	SMP	Slot, menu, parameter
Num	Number parameter	DE	Destination	ND	No default value	RA	Rating dependent	NC	Non-copyable	PT	Protected
FI	Filtered	US	User save	PS	Power-down save						

Menu 20 − *Application Menu 2*

Mode: RFC-A

See introduction to menu 18.

Parameter	20.021 *Application Menu 3 Read-write Long Integer 21*		
Short description	General read-write long integer application parameter		
Mode	RFC-A		
Minimum	-2147483648	Maximum	2147483647
Default	0	Units	
Type	32 Bit Volatile	Update Rate	N/A
Display Format	Standard	Decimal Places	0
Coding	RW		

Parameter	20.022 *Application Menu 3 Read-write Long Integer 22*		
Short description	General read-write long integer application parameter		
Mode	RFC-A		
Minimum	-2147483648	Maximum	2147483647
Default	0	Units	
Type	32 Bit Volatile	Update Rate	N/A
Display Format	Standard	Decimal Places	0
Coding	RW		

Parameter	20.023 *Application Menu 3 Read-write Long Integer 23*		
Short description	General read-write long integer application parameter		
Mode	RFC-A		
Minimum	-2147483648	Maximum	2147483647
Default	0	Units	
Type	32 Bit Volatile	Update Rate	N/A
Display Format	Standard	Decimal Places	0
Coding	RW		

Parameter	20.024 *Application Menu 3 Read-write Long Integer 24*		
Short description	General read-write long integer application parameter		
Mode	RFC-A		
Minimum	-2147483648	Maximum	2147483647
Default	0	Units	
Type	32 Bit Volatile	Update Rate	N/A
Display Format	Standard	Decimal Places	0
Coding	RW		

Parameter	20.025 *Application Menu 3 Read-write Long Integer 25*		
Short description	General read-write long integer application parameter		
Mode	RFC-A		
Minimum	-2147483648	Maximum	2147483647
Default	0	Units	
Type	32 Bit Volatile	Update Rate	N/A
Display Format	Standard	Decimal Places	0
Coding	RW		

Parameter	20.026 *Application Menu 3 Read-write Long Integer 26*		
Short description	General read-write long integer application parameter		
Mode	RFC-A		
Minimum	-2147483648	Maximum	2147483647
Default	0	Units	
Type	32 Bit Volatile	Update Rate	N/A
Display Format	Standard	Decimal Places	0
Coding	RW		

Parameter	20.027 *Application Menu 3 Read-write Long Integer 27*		
Short description	General read-write long integer application parameter		
Mode	RFC-A		
Minimum	-2147483648	Maximum	2147483647
Default	0	Units	
Type	32 Bit Volatile	Update Rate	N/A
Display Format	Standard	Decimal Places	0
Coding	RW		

Parameter	20.028 *Application Menu 3 Read-write Long Integer 28*		
Short description	General read-write long integer application parameter		
Mode	RFC-A		
Minimum	-2147483648	Maximum	2147483647
Default	0	Units	
Type	32 Bit Volatile	Update Rate	N/A
Display Format	Standard	Decimal Places	0
Coding	RW		

Parameter	20.029 *Application Menu 3 Read-write Long Integer 29*		
Short description	General read-write long integer application parameter		
Mode	RFC-A		
Minimum	-2147483648	Maximum	2147483647
Default	0	Units	
Type	32 Bit Volatile	Update Rate	N/A
Display Format	Standard	Decimal Places	0
Coding	RW		

Parameter	20.030 *Application Menu 3 Read-write Long Integer 30*		
Short description	General read-write long integer application parameter		
Mode	RFC-A		
Minimum	-2147483648	Maximum	2147483647
Default	0	Units	
Type	32 Bit Volatile	Update Rate	N/A
Display Format	Standard	Decimal Places	0
Coding	RW		

Menu 21 Single Line Descriptions − *Motor 2 Parameters*

Mode: RFC-A

Parameter		Range	Default	Type					
21.001	M2 Maximum Speed	±VM_POSITIVE_REF_CLAMP Hz	50Hz: 50.00 Hz 60Hz: 60.00 Hz	RW	Num				US
21.002	M2 Minimum Speed	±VM_NEGATIVE_REF_CLAMP2 Hz	0.00 Hz	RW	Num				US
21.003	M2 Reference Selector	A1 A2 (0), A1 Preset (1), A2 Preset (2), Preset (3), Keypad (4), Reserved (5), Keypad Ref (6)	A1 A2 (0)	RW	Txt				US
21.004	M2 Acceleration Rate 1	±VM_ACCEL_RATE	5.0	RW	Num				US
21.005	M2 Deceleration Rate 1	±VM_ACCEL_RATE	10.0	RW	Num				US
21.006	M2 Motor Rated Frequency	0.00 to 550.00 Hz	50Hz: 50.00 Hz 60Hz: 60.00 Hz	RW	Num				US
21.007	M2 Motor Rated Current	±VM_RATED_CURRENT A	0.00 A	RW	Num		RA		US
21.008	M2 Motor Rated Speed	0.0 to 33000.0 rpm	50Hz: 1500.0 rpm 60Hz: 1800.0 rpm	RW	Num				US
21.009	M2 Motor Rated Voltage	±VM_AC_VOLTAGE_SET V	110V drive: 230 V 200V drive: 230 V 400V drive 50Hz: 400 V 400V drive 60Hz: 460 V 575V drive: 575 V 690V drive: 690 V	RW	Num		RA		US
21.010	M2 Motor Rated Power Factor	0.00 to 1.00	0.85	RW	Num		RA		US
21.011	M2 Number of Motor Poles	Automatic (0) to 32 (16) Poles	Automatic (0) Poles	RW	Txt				US
21.012	M2 Stator Resistance	0.0000 to 99.9999 Ω	0.0000 Ω	RW	Num		RA		US
21.014	M2 Transient Inductance	0.000 to 500.000 mH	0.000 mH	RW	Num		RA		US
21.015	Motor 2 Active	Off (0) or On (1)		RO	Bit	ND	NC	PT	
21.016	M2 Motor Thermal Time Constant 1	1 to 3000 s	179 s	RW	Num				US
21.017	M2 Frequency Controller Proportional Gain Kp1	0.000 to 200.000 s/rad	0.100 s/rad	RW	Num				US
21.018	M2 Frequency Controller Integral Gain Ki1	0.00 to 655.35 s^2/rad	0.10 s^2/rad	RW	Num				US
21.019	M2 Frequency Controller Differential Feedback Gain Kd1	0.00000 to 0.65535 1/rad	0.00000 1/rad	RW	Num				US
21.022	M2 Current Controller Kp Gain	0.00 to 4000.00	20.00	RW	Num				US
21.023	M2 Current Controller Ki Gain	0.000 to 600.000	40.000	RW	Num				US
21.024	M2 Stator Inductance	0.00 to 5000.00 mH	0.00 mH	RW	Num		RA		US
21.025	M2 Saturation Breakpoint 1	0.0 to 100.0 %	50.0 %	RW	Num				US
21.026	M2 Saturation Breakpoint 3	0.0 to 100.0 %	75.0 %	RW	Num				US
21.027	M2 Motoring Current Limit	±VM_MOTOR2_CURRENT_LIMIT %	165.0 %	RW	Num		RA		US
21.028	M2 Regenerating Current Limit	±VM_MOTOR2_CURRENT_LIMIT %	165.0 %	RW	Num		RA		US
21.029	M2 Symmetrical Current Limit	±VM_MOTOR2_CURRENT_LIMIT %	165.0 %	RW	Num		RA		US
21.033	M2 Low Frequency Thermal Protection Mode	0 to 1	0	RW	Num				US
21.041	M2 Saturation Breakpoint 2	0.0 to 100.0 %	0.0 %	RW	Num				US
21.042	M2 Saturation Breakpoint 4	0.0 to 100.0 %	0.0 %	RW	Num				US

RW	Read / Write	RO	Read-only	Bit	Bit parameter	Txt	Text string	Date	Date parameter	Time	Time parameter
Chr	Character parameter	Bin	Binary parameter	IP	IP address	Mac	MAC address	Ver	Version number	SMP	Slot, menu, parameter
Num	Number parameter	DE	Destination	ND	No default value	RA	Rating dependent	NC	Non-copyable	PT	Protected
FI	Filtered	US	User save	PS	Power-down save						

Menu 21 − *Motor 2 Parameters*

Mode: RFC-A

If *Select Motor 2 Parameters* (11.045) = 1 then the motor set-up parameters given in the table below are used instead of the equivalent parameters in other menus. The motor 2 parameters have the same attributes etc. as the equivalent parameters in other menus.

Parameter	Motor map 2 parameter	Equivalent parameter
21.001	*M2 Maximum Speed* (21.001)	*Maximum Speed* (01.006)
21.002	*M2 Minimum Speed* (21.002)	*Minimum Speed* (01.007)
21.003	*M2 Reference Selector* (21.003)	*Reference Selector* (01.014)
21.004	*M2 Acceleration Rate 1* (21.004)	*Acceleration Rate 1* (02.011)
21.005	*M2 Deceleration Rate 1* (21.005)	*Deceleration Rate 1* (02.021)
21.006	*M2 Motor Rated Frequency* (21.006)	*Motor Rated Frequency* (05.006)
21.007	*M2 Motor Rated Current* (21.007)	*Motor Rated Current* (05.007)
21.008	*M2 Motor Rated Speed* (21.008)	*Motor Rated Speed* (05.008)
21.009	*M2 Motor Rated Voltage* (21.009)	*Motor Rated Voltage* (05.009)
21.010	*M2 Motor Rated Power Factor* (21.010)	*Motor Rated Power Factor* (05.010)
21.011	*M2 Number of Motor Poles* (21.011)	*Number Of Motor Poles* (05.011)
21.012	*M2 Stator Resistance* (21.012)	*Stator Resistance*
21.014	*M2 Transient Inductance* (21.014)	*Transient Inductance* (05.024)
21.015	*Motor 2 Active* (21.015)	N/A
21.016	*M2 Motor Thermal Time Constant 1* (21.016)	*Motor Thermal Time Constant 1*
21.017	*M2 Frequency Controller Proportional Gain Kp1* (21.017)	*Frequency Controller Proportional Gain Kp1* (03.010)
21.018	*M2 Frequency Controller Integral Gain Ki1* (21.018)	*Frequency Controller Integral Gain Ki1* (03.011)
21.019	*M2 Frequency Controller Differential Feedback Gain Kd1* (21.019)	*Frequency Controller Differential Feedback Gain Kd1* (03.012)
21.022	*M2 Current Controller Kp Gain* (21.022)	*Current Controller Kp Gain* (04.013)
21.023	*M2 Current Controller Ki Gain* (21.023)	*Current Controller Ki Gain* (04.014)
21.024	*M2 Stator Inductance* (21.024)	*Stator Inductance* (05.025)
21.025	*M2 Saturation Breakpoint 1* (21.025)	*Saturation Breakpoint 1* (05.029)
21.026	*M2 Saturation Breakpoint 3* (21.026)	*Saturation Breakpoint 3* (05.030)
21.027	*M2 Motoring Current Limit* (21.027)	*Motoring Current Limit* (04.005)
21.028	*M2 Regenerating Current Limit* (21.028)	*Regenerating Current Limit* (04.006)
21.029	*M2 Symmetrical Current Limit* (21.029)	*Symmetrical Current Limit* (04.007)
21.033	*M2 Low Frequency Thermal Protection Mode* (21.033)	*Low Frequency Thermal Protection Mode* (04.025)
21.041	*M2 Saturation Breakpoint 2* (21.041)	*Saturation Breakpoint 2* (05.062)
21.042	*M2 Saturation Breakpoint 4* (21.042)	*Saturation Breakpoint 4* (05.063)

Parameter	**21.001 *M2 Maximum Speed***		
Short description	Defines the maximum reference clamp for motor map 2		
Mode	RFC-A		
Minimum	−VM_POSITIVE_REF_CLAMP	Maximum	VM_POSITIVE_REF_CLAMP
Default	See exceptions below	Units	Hz
Type	32 Bit User Save	Update Rate	Background read
Display Format	Standard	Decimal Places	2
Coding	RW, VM		

Region	***Default Value***
50Hz	50.00
60Hz	60.00

This is the motor map 2 equivalent parameter for *Maximum Speed* (01.006).

Parameter	**21.002 *M2 Minimum Speed***		
Short description	Defines the minimum reference clamp for motor map 2		
Mode	RFC-A		
Minimum	−VM_NEGATIVE_REF_CLAMP2	Maximum	VM_NEGATIVE_REF_CLAMP2
Default	0.00	Units	Hz
Type	32 Bit User Save	Update Rate	Background read
Display Format	Standard	Decimal Places	2
Coding	RW, VM		

This is the motor map 2 equivalent for *Minimum Speed* (01.007).

Parameter	21.003 *M2 Reference Selector*		
Short description	Defines which reference is used for motor map 2		
Mode	RFC-A		
Minimum	0	Maximum	6
Default	0	Units	
Type	8 Bit User Save	Update Rate	4ms read
Display Format	Standard	Decimal Places	0
Coding	RW, TE		

Value	*Text*	*Description*
0	A1 A2	Analogue reference 1 or 2 selected by terminal input
1	A1 Preset	Analogue reference 1 or Presets selected by terminal input
2	A2 Preset	Analogue reference 2 or Presets selected by terminal input
3	Preset	Preset reference selected by terminal
4	Keypad	Keypad reference selected
5	Reserved	Reserved
6	Keypad Ref	Keypad reference selected but no control mode

This is the motor map 2 equivalent for *Reference Selector* (01.014).

Parameter	21.004 *M2 Acceleration Rate 1*		
Short description	Defines the acceleration rate used for motor map 2		
Mode	RFC-A		
Minimum	−VM_ACCEL_RATE	Maximum	VM_ACCEL_RATE
Default	5.0	Units	
Type	32 Bit User Save	Update Rate	16ms
Display Format	Standard	Decimal Places	1
Coding	RW, VM		

This is the motor map 2 equivalent for *Acceleration Rate 1* (02.011).

Parameter	21.005 *M2 Deceleration Rate 1*		
Short description	Defines the deceleration rate used for motor map 2		
Mode	RFC-A		
Minimum	−VM_ACCEL_RATE	Maximum	VM_ACCEL_RATE
Default	10.0	Units	
Type	32 Bit User Save	Update Rate	16ms
Display Format	Standard	Decimal Places	1
Coding	RW, VM		

This is the motor map 2 equivalent for *Deceleration Rate 1* (02.021).

Parameter	21.006 *M2 Motor Rated Frequency*		
Short description	Defines the motor rated frequency used for motor map 2		
Mode	RFC-A		
Minimum	0.00	Maximum	550.00
Default	See exceptions below	Units	Hz
Type	32 Bit User Save	Update Rate	Background read
Display Format	Standard	Decimal Places	2
Coding	RW		

Region	*Default Value*
50Hz	50.00
60Hz	60.00

This is the motor map 2 equivalent for *Motor Rated Frequency* (05.006).

Parameter	21.007 *M2 Motor Rated Current*		
Short description	Defines the motor rated used for motor map 2		
Mode	RFC-A		
Minimum	−VM_RATED_CURRENT	Maximum	VM_RATED_CURRENT
Default	0.00	Units	A
Type	32 Bit User Save	Update Rate	Background read
Display Format	Standard	Decimal Places	2
Coding	RW, VM, RA		

This is the motor map 2 equivalent for *Motor Rated Current* (05.007).

Parameter	21.008 *M2 Motor Rated Speed*		
Short description	Defines the motor rated speed used for motor map 2		
Mode	RFC-A		
Minimum	0.0	Maximum	33000.0
Default	See exceptions below	Units	rpm
Type	32 Bit User Save	Update Rate	Background read
Display Format	Standard	Decimal Places	1
Coding	RW		

Region	*Default Value*
50Hz	1500.0
60Hz	1800.0

This is the motor map 2 equivalent for *Motor Rated Speed* (05.008).

Parameter	21.009 *M2 Motor Rated Voltage*		
Short description	Defines the motor rated voltage used for motor map 2		
Mode	RFC-A		
Minimum	−VM_AC_VOLTAGE_SET	Maximum	VM_AC_VOLTAGE_SET
Default	See exceptions below	Units	V
Type	16 Bit User Save	Update Rate	16ms
Display Format	Standard	Decimal Places	0
Coding	RW, VM, RA		

Voltage	*Region*	*Default Value*
110V	All	230
200V	All	230
400V	50Hz	400
400V	60Hz	460
575V	All	575
690V	All	690

This is the motor map 2 equivalent for *Motor Rated Voltage* (05.009).

Parameter	21.010 *M2 Motor Rated Power Factor*		
Short description	Defines the motor rated power factor used for motor map 2		
Mode	RFC-A		
Minimum	0.00	Maximum	1.00
Default	0.85	Units	
Type	16 Bit User Save	Update Rate	Background read/write
Display Format	Standard	Decimal Places	2
Coding	RW, RA		

This is the motor map 2 equivalent for *Motor Rated Power Factor* (05.010).

Parameter	21.011 *M2 Number of Motor Poles*		
Short description	Defines the number of motor poles used for motor map 2		
Mode	RFC-A		
Minimum	0	Maximum	16
Default	0	Units	PolePairs
Type	8 Bit User Save	Update Rate	Background read
Display Format	Standard	Decimal Places	0
Coding	RW, BU		

This is the motor map 2 equivalent for *Number Of Motor Poles* (05.011).

Parameter	21.012 *M2 Stator Resistance*		
Short description	Defines the stator resistance used for motor map 2		
Mode	RFC-A		
Minimum	0.0000	Maximum	99.9999
Default	0.0000	Units	Ω
Type	32 Bit User Save	Update Rate	Background read
Display Format	Standard	Decimal Places	4
Coding	RW, RA		

This is the motor map 2 equivalent for *Stator Resistance* (05.017).

Parameter	21.014 *M2 Transient Inductance*		
Short description	Defines the transient inductance used for motor map 2		
Mode	RFC-A		
Minimum	0.000	Maximum	500.000
Default	0.000	Units	mH
Type	32 Bit User Save	Update Rate	Background read
Display Format	Standard	Decimal Places	3
Coding	RW, RA		

This is the motor map 2 equivalent for *Transient Inductance* (05.024).

Parameter	21.015 *Motor 2 Active*		
Short description	Indicates if motor 2 parameters are being used by the drive		
Mode	RFC-A		
Minimum	0	Maximum	1
Default		Units	
Type	1 Bit Volatile	Update Rate	Background write
Display Format	Standard	Decimal Places	0
Coding	RO, ND, NC, PT		

If *Motor 2 Active* (21.015) = 0 then the standard motor set-up parameters are being used or if *Motor 2 Active* (21.015) = 1 then the motor 2 parameters are being used. The motor set-up parameters do not necessarily change immediately when *Select Motor 2 Parameters* (11.045) is changed (i.e. the drive may be enabled). *Motor 2 Active* (21.015) shows the actual motor parameters being used and only changes when the new parameters start being used by the drive.

Parameter	21.016 *M2 Motor Thermal Time Constant 1*		
Short description	Defines the thermal time constant of the motor used for motor map 2		
Mode	RFC-A		
Minimum	1	Maximum	3000
Default	179	Units	s
Type	16 Bit User Save	Update Rate	Background read
Display Format	Standard	Decimal Places	0
Coding	RW		

This is the motor map 2 equivalent of *Motor Thermal Time Constant 1* (04.015).

Parameter	21.017 *M2 Frequency Controller Proportional Gain Kp1*		
Short description	Defines the Kp value of the frequency controller used for motor map 2		
Mode	RFC-A		
Minimum	0.000	Maximum	200.000
Default	0.100	Units	s/rad
Type	32 Bit User Save	Update Rate	Background
Display Format	Standard	Decimal Places	3
Coding	RW		

This is the motor map 2 equivalent for *Frequency Controller Proportional Gain Kp1* (03.010).

Parameter	21.018 *M2 Frequency Controller Integral Gain Ki1*		
Short description	Defines the Ki value of the frequency controller used for motor map 2		
Mode	RFC-A		
Minimum	0.00	Maximum	655.35
Default	0.10	Units	s^2/rad
Type	16 Bit User Save	Update Rate	Background
Display Format	Standard	Decimal Places	2
Coding	RW, BU		

This is the motor map 2 equivalent for *Frequency Controller Integral Gain Ki1* (03.011).

Parameter	21.019 *M2 Frequency Controller Differential Feedback Gain Kd1*		
Short description	Defines the Kd value of the frequency controller used for motor map 2		
Mode	RFC-A		
Minimum	0.00000	Maximum	0.65535
Default	0.00000	Units	1/rad
Type	16 Bit User Save	Update Rate	Background
Display Format	Standard	Decimal Places	5
Coding	RW, BU		

This is the motor map 2 equivalent for *Frequency Controller Differential Feedback Gain Kd1* (03.012).

Parameter	21.022 *M2 Current Controller Kp Gain*		
Short description	Defines the Kp value of the current controller used for motor map 2		
Mode	RFC-A		
Minimum	0.00	Maximum	4000.00
Default	20.00	Units	
Type	32 Bit User Save	Update Rate	Background read
Display Format	Standard	Decimal Places	2
Coding	RW		

This is the motor map 2 equivalent for *Current Controller Kp Gain* (04.013).

Parameter	21.023 *M2 Current Controller Ki Gain*		
Short description	Defines the Ki value of the current controller used for motor map 2		
Mode	RFC-A		
Minimum	0.000	Maximum	600.000
Default	40.000	Units	
Type	32 Bit User Save	Update Rate	Background read
Display Format	Standard	Decimal Places	3
Coding	RW		

This is the motor map 2 equivalent for *Current Controller Ki Gain* (04.014).

Parameter	21.024 *M2 Stator Inductance*		
Short description	Defines the stator inductance of the motor used for motor map 2		
Mode	RFC-A		
Minimum	0.00	Maximum	5000.00
Default	0.00	Units	mH
Type	32 Bit User Save	Update Rate	Background read
Display Format	Standard	Decimal Places	2
Coding	RW, RA		

This is the motor map 2 equivalent for *Stator Inductance* (05.025).

Parameter	21.025 *M2 Saturation Breakpoint 1*		
Short description	Defines the 1st saturation breakpoint for motor map 2		
Mode	RFC-A		
Minimum	0.0	Maximum	100.0
Default	50.0	Units	%
Type	16 Bit User Save	Update Rate	Background read
Display Format	Standard	Decimal Places	1
Coding	RW		

This is the motor map 2 equivalent for *Saturation Breakpoint 1* (05.029).

Parameter	21.026 *M2 Saturation Breakpoint 3*		
Short description	Defines the 3rd saturation breakpoint for motor map 2		
Mode	RFC-A		
Minimum	0.0	Maximum	100.0
Default	75.0	Units	%
Type	16 Bit User Save	Update Rate	Background read
Display Format	Standard	Decimal Places	1
Coding	RW		

This is the motor map 2 equivalent for *Saturation Breakpoint 3* (05.030).

Parameter	21.027 *M2 Motoring Current Limit*		
Short description	Defines the motoring current limit used for motor map 2		
Mode	RFC-A		
Minimum	−VM_MOTOR2_CURRENT_LIMIT	Maximum	VM_MOTOR2_CURRENT_LIMIT
Default	165.0	Units	%
Type	16 Bit User Save	Update Rate	16ms
Display Format	Standard	Decimal Places	1
Coding	RW, VM, RA		

This is the motor map 2 equivalent for *Motoring Current Limit* (04.005).

Parameter	21.028 *M2 Regenerating Current Limit*		
Short description			
Mode	RFC-A		
Minimum	-VM_MOTOR2_CURRENT_LIMIT	Maximum	VM_MOTOR2_CURRENT_LIMIT
Default	165.0	Units	%
Type	16 Bit User Save	Update Rate	16ms
Display Format	Standard	Decimal Places	1
Coding	RW, VM, RA		

This is the motor map 2 equivalent for *Regenerating Current Limit* (04.006).

Parameter	21.029 *M2 Symmetrical Current Limit*		
Short description	Defines the symmetrical current limit used for motor map 2		
Mode	RFC-A		
Minimum	-VM_MOTOR2_CURRENT_LIMIT	Maximum	VM_MOTOR2_CURRENT_LIMIT
Default	165.0	Units	%
Type	16 Bit User Save	Update Rate	16ms
Display Format	Standard	Decimal Places	1
Coding	RW, VM, RA		

This is the motor map 2 equivalent for *Symmetrical Current Limit* (04.007).

Parameter	21.033 *M2 Low Frequency Thermal Protection Mode*		
Short description	Set to enable low frequency thermal protection mod		
Mode	RFC-A		
Minimum	0	Maximum	1
Default	0	Units	
Type	8 Bit User Save	Update Rate	Background read
Display Format	Standard	Decimal Places	0
Coding	RW		

This is the motor map 2 equivalent for *Low Frequency Thermal Protection Mode* (04.025).

Parameter	21.041 *M2 Saturation Breakpoint 2*		
Short description	Defines the 2nd saturation breakpoint for motor map 2		
Mode	RFC-A		
Minimum	0.0	Maximum	100.0
Default	0.0	Units	%
Type	16 Bit User Save	Update Rate	Background read
Display Format	Standard	Decimal Places	1
Coding	RW		

This is the motor map 2 equivalent for *Saturation Breakpoint 2* (05.062).

Parameter	21.042 *M2 Saturation Breakpoint 4*		
Short description	Defines the 4th saturation breakpoint for motor map 2		
Mode	RFC-A		
Minimum	0.0	Maximum	100.0
Default	0.0	Units	%
Type	16 Bit User Save	Update Rate	Background read
Display Format	Standard	Decimal Places	1
Coding	RW		

This is the motor map 2 equivalent for *Saturation Breakpoint 4* (05.063).

Menu 22 Single Line Descriptions − *Menu 0 Setup*

Mode: RFC-A

Parameter		Range	Default	Type					
22.001	Parameter 00.001 Set-up	0.000 to 30.999	1.007	RW	Num			PT	US
22.002	Parameter 00.002 Set-up	0.000 to 30.999	1.006	RW	Num			PT	US
22.003	Parameter 00.003 Set-up	0.000 to 30.999	2.011	RW	Num			PT	US
22.004	Parameter 00.004 Set-up	0.000 to 30.999	2.021	RW	Num			PT	US
22.005	Parameter 00.005 Set-up	0.000 to 30.999	11.034	RW	Num			PT	US
22.006	Parameter 00.006 Set-up	0.000 to 30.999	5.007	RW	Num			PT	US
22.007	Parameter 00.007 Set-up	0.000 to 30.999	5.008	RW	Num			PT	US
22.008	Parameter 00.008 Set-up	0.000 to 30.999	5.009	RW	Num			PT	US
22.009	Parameter 00.009 Set-up	0.000 to 30.999	5.010	RW	Num			PT	US
22.010	Parameter 00.010 Set-up	0.000 to 30.999	11.044	RW	Num			PT	US
22.011	Parameter 00.011 Set-up	0.000 to 30.999	6.004	RW	Num			PT	US
22.012	Parameter 00.012 Set-up	0.000 to 30.999	8.010	RW	Num			PT	US
22.013	Parameter 00.013 Set-up	0.000 to 30.999	0.000	RW	Num			PT	US
22.014	Parameter 00.014 Set-up	0.000 to 30.999	0.000	RW	Num			PT	US
22.015	Parameter 00.015 Set-up	0.000 to 30.999	1.005	RW	Num			PT	US
22.016	Parameter 00.016 Set-up	0.000 to 30.999	7.007	RW	Num			PT	US
22.017	Parameter 00.017 Set-up	0.000 to 30.999	1.010	RW	Num			PT	US
22.018	Parameter 00.018 Set-up	0.000 to 30.999	1.021	RW	Num			PT	US
22.019	Parameter 00.019 Set-up	0.000 to 30.999	1.022	RW	Num			PT	US
22.020	Parameter 00.020 Set-up	0.000 to 30.999	1.023	RW	Num			PT	US
22.021	Parameter 00.021 Set-up	0.000 to 30.999	1.024	RW	Num			PT	US
22.022	Parameter 00.022 Set-up	0.000 to 30.999	11.019	RW	Num			PT	US
22.023	Parameter 00.023 Set-up	0.000 to 30.999	11.018	RW	Num			PT	US
22.024	Parameter 00.024 Set-up	0.000 to 30.999	11.021	RW	Num			PT	US
22.025	Parameter 00.025 Set-up	0.000 to 30.999	11.030	RW	Num			PT	US
22.026	Parameter 00.026 Set-up	0.000 to 30.999	0.000	RW	Num			PT	US
22.027	Parameter 00.027 Set-up	0.000 to 30.999	1.051	RW	Num			PT	US
22.028	Parameter 00.028 Set-up	0.000 to 30.999	2.004	RW	Num			PT	US
22.029	Parameter 00.029 Set-up	0.000 to 30.999	2.002	RW	Num			PT	US
22.030	Parameter 00.030 Set-up	0.000 to 30.999	11.042	RW	Num			PT	US
22.031	Parameter 00.031 Set-up	0.000 to 30.999	6.001	RW	Num			PT	US
22.032	Parameter 00.032 Set-up	0.000 to 30.999	5.013	RW	Num			PT	US
22.033	Parameter 00.033 Set-up	0.000 to 30.999	6.009	RW	Num			PT	US
22.034	Parameter 00.034 Set-up	0.000 to 30.999	8.035	RW	Num			PT	US
22.035	Parameter 00.035 Set-up	0.000 to 30.999	8.091	RW	Num			PT	US
22.036	Parameter 00.036 Set-up	0.000 to 30.999	7.055	RW	Num			PT	US
22.037	Parameter 00.037 Set-up	0.000 to 30.999	5.018	RW	Num			PT	US
22.038	Parameter 00.038 Set-up	0.000 to 30.999	5.012	RW	Num			PT	US
22.039	Parameter 00.039 Set-up	0.000 to 30.999	5.006	RW	Num			PT	US
22.040	Parameter 00.040 Set-up	0.000 to 30.999	5.011	RW	Num			PT	US
22.041	Parameter 00.041 Set-up	0.000 to 30.999	5.014	RW	Num			PT	US
22.042	Parameter 00.042 Set-up	0.000 to 30.999	5.015	RW	Num			PT	US
22.043	Parameter 00.043 Set-up	0.000 to 30.999	11.025	RW	Num			PT	US
22.044	Parameter 00.044 Set-up	0.000 to 30.999	11.023	RW	Num			PT	US
22.045	Parameter 00.045 Set-up	0.000 to 30.999	11.020	RW	Num			PT	US
22.046	Parameter 00.046 Set-up	0.000 to 30.999	12.042	RW	Num			PT	US
22.047	Parameter 00.047 Set-up	0.000 to 30.999	12.043	RW	Num			PT	US
22.048	Parameter 00.048 Set-up	0.000 to 30.999	12.044	RW	Num			PT	US
22.049	Parameter 00.049 Set-up	0.000 to 30.999	12.045	RW	Num			PT	US
22.050	Parameter 00.050 Set-up	0.000 to 30.999	12.046	RW	Num			PT	US
22.051	Parameter 00.051 Set-up	0.000 to 30.999	12.047	RW	Num			PT	US
22.052	Parameter 00.052 Set-up	0.000 to 30.999	0.000	RW	Num			PT	US
22.053	Parameter 00.053 Set-up	0.000 to 30.999	12.050	RW	Num			PT	US
22.054	Parameter 00.054 Set-up	0.000 to 30.999	12.051	RW	Num			PT	US
22.055	Parameter 00.055 Set-up	0.000 to 30.999	12.041	RW	Num			PT	US
22.056	Parameter 00.056 Set-up	0.000 to 30.999	10.020	RW	Num			PT	US
22.057	Parameter 00.057 Set-up	0.000 to 30.999	10.021	RW	Num			PT	US
22.058	Parameter 00.058 Set-up	0.000 to 30.999	10.022	RW	Num			PT	US
22.059	Parameter 00.059 Set-up	0.000 to 30.999	11.047	RW	Num			PT	US
22.060	Parameter 00.060 Set-up	0.000 to 30.999	11.048	RW	Num			PT	US
22.061	Parameter 00.061 Set-up	0.000 to 30.999	0.000	RW	Num			PT	US
22.062	Parameter 00.062 Set-up	0.000 to 30.999	0.000	RW	Num			PT	US
22.063	Parameter 00.063 Set-up	0.000 to 30.999	0.000	RW	Num			PT	US

22.064	Parameter 00.064 Set-up	0.000 to 30.999	0.000	RW	Num			PT	US
22.065	Parameter 00.065 Set-up	0.000 to 30.999	3.010	RW	Num			PT	US
22.066	Parameter 00.066 Set-up	0.000 to 30.999	3.011	RW	Num			PT	US
22.067	Parameter 00.067 Set-up	0.000 to 30.999	3.079	RW	Num			PT	US
22.068	Parameter 00.068 Set-up	0.000 to 30.999	0.000	RW	Num			PT	US
22.069	Parameter 00.069 Set-up	0.000 to 30.999	5.040	RW	Num			PT	US
22.070	Parameter 00.070 Set-up	0.000 to 30.999	14.001	RW	Num			PT	US
22.071	Parameter 00.071 Set-up	0.000 to 30.999	14.010	RW	Num			PT	US
22.072	Parameter 00.072 Set-up	0.000 to 30.999	14.011	RW	Num			PT	US
22.073	Parameter 00.073 Set-up	0.000 to 30.999	14.006	RW	Num			PT	US
22.074	Parameter 00.074 Set-up	0.000 to 30.999	14.013	RW	Num			PT	US
22.075	Parameter 00.075 Set-up	0.000 to 30.999	14.014	RW	Num			PT	US
22.076	Parameter 00.076 Set-up	0.000 to 30.999	10.037	RW	Num			PT	US
22.077	Parameter 00.077 Set-up	0.000 to 30.999	11.032	RW	Num			PT	US
22.078	Parameter 00.078 Set-up	0.000 to 30.999	11.029	RW	Num			PT	US
22.079	Parameter 00.079 Set-up	0.000 to 30.999	11.031	RW	Num			PT	US
22.080	Parameter 00.080 Set-up	0.000 to 30.999	0.000	RW	Num			PT	US

RW	Read / Write	RO	Read-only	Bit	Bit parameter	Txt	Text string	Date	Date parameter	Time	Time parameter
Chr	Character parameter	Bin	Binary parameter	IP	IP address	Mac	MAC address	Ver	Version number	SMP	Slot, menu, parameter
Num	Number parameter	DE	Destination	ND	No default value	RA	Rating dependent	NC	Non-copyable	PT	Protected
FI	Filtered	US	User save	PS	Power-down save						

Menu 22 − *Menu 0 Setup*

Mode: RFC-A

Parameter	22.001 *Parameter 00.001 Set-up*		
Short description	Defines the parameter to be shown in 00.001		
Mode	RFC-A		
Minimum	0.000	Maximum	30.999
Default	1.007	Units	
Type	16 Bit User Save	Update Rate	Background read
Display Format	Standard	Decimal Places	3
Coding	RW, PT, BU		

Parameter	22.002 *Parameter 00.002 Set-up*		
Short description	Defines the parameter to be shown in 00.002		
Mode	RFC-A		
Minimum	0.000	Maximum	30.999
Default	1.006	Units	
Type	16 Bit User Save	Update Rate	Background read
Display Format	Standard	Decimal Places	3
Coding	RW, PT, BU		

Parameter	22.003 *Parameter 00.003 Set-up*		
Short description	Defines the parameter to be shown in 00.003		
Mode	RFC-A		
Minimum	0.000	Maximum	30.999
Default	2.011	Units	
Type	16 Bit User Save	Update Rate	Background read
Display Format	Standard	Decimal Places	3
Coding	RW, PT, BU		

Parameter	22.004 *Parameter 00.004 Set-up*		
Short description	Defines the parameter to be shown in 00.004		
Mode	RFC-A		
Minimum	0.000	Maximum	30.999
Default	2.021	Units	
Type	16 Bit User Save	Update Rate	Background read
Display Format	Standard	Decimal Places	3
Coding	RW, PT, BU		

Parameter	22.005 *Parameter 00.005 Set-up*		
Short description	Defines the parameter to be shown in 00.005		
Mode	RFC-A		
Minimum	0.000	Maximum	30.999
Default	11.034	Units	
Type	16 Bit User Save	Update Rate	Background read
Display Format	Standard	Decimal Places	3
Coding	RW, PT, BU		

Parameter	22.006 *Parameter 00.006 Set-up*		
Short description	Defines the parameter to be shown in 00.006		
Mode	RFC-A		
Minimum	0.000	Maximum	30.999
Default	5.007	Units	
Type	16 Bit User Save	Update Rate	Background read
Display Format	Standard	Decimal Places	3
Coding	RW, PT, BU		

Parameter	22.007 *Parameter 00.007 Set-up*		
Short description	Defines the parameter to be shown in 00.007		
Mode	RFC-A		
Minimum	0.000	Maximum	30.999
Default	5.008	Units	
Type	16 Bit User Save	Update Rate	Background read
Display Format	Standard	Decimal Places	3
Coding	RW, PT, BU		

Parameter	22.008 *Parameter 00.008 Set-up*		
Short description	Defines the parameter to be shown in 00.008		
Mode	RFC-A		
Minimum	0.000	Maximum	30.999
Default	5.009	Units	
Type	16 Bit User Save	Update Rate	Background read
Display Format	Standard	Decimal Places	3
Coding	RW, PT, BU		

Parameter	22.009 *Parameter 00.009 Set-up*		
Short description	Defines the parameter to be shown in 00.009		
Mode	RFC-A		
Minimum	0.000	Maximum	30.999
Default	5.010	Units	
Type	16 Bit User Save	Update Rate	Background read
Display Format	Standard	Decimal Places	3
Coding	RW, PT, BU		

Parameter	22.010 *Parameter 00.010 Set-up*		
Short description	Defines the parameter to be shown in 00.010		
Mode	RFC-A		
Minimum	0.000	Maximum	30.999
Default	11.044	Units	
Type	16 Bit User Save	Update Rate	Background read
Display Format	Standard	Decimal Places	3
Coding	RW, PT, BU		

Parameter	22.011 *Parameter 00.011 Set-up*		
Short description	Defines the parameter to be shown in 00.011		
Mode	RFC-A		
Minimum	0.000	Maximum	30.999
Default	6.004	Units	
Type	16 Bit User Save	Update Rate	Background read
Display Format	Standard	Decimal Places	3
Coding	RW, PT, BU		

Parameter	22.012 *Parameter 00.012 Set-up*		
Short description	Defines the parameter to be shown in 00.012		
Mode	RFC-A		
Minimum	0.000	Maximum	30.999
Default	8.010	Units	
Type	16 Bit User Save	Update Rate	Background read
Display Format	Standard	Decimal Places	3
Coding	RW, PT, BU		

Parameter	22.013 *Parameter 00.013 Set-up*		
Short description	Defines the parameter to be shown in 00.013		
Mode	RFC-A		
Minimum	0.000	Maximum	30.999
Default	0.000	Units	
Type	16 Bit User Save	Update Rate	Background read
Display Format	Standard	Decimal Places	3
Coding	RW, PT, BU		

Parameter	22.014 *Parameter 00.014 Set-up*		
Short description	Defines the parameter to be shown in 00.014		
Mode	RFC-A		
Minimum	0.000	Maximum	30.999
Default	0.000	Units	
Type	16 Bit User Save	Update Rate	Background read
Display Format	Standard	Decimal Places	3
Coding	RW, PT, BU		

Parameter	22.015 *Parameter 00.015 Set-up*		
Short description	Defines the parameter to be shown in 00.015		
Mode	RFC-A		
Minimum	0.000	Maximum	30.999
Default	1.005	Units	
Type	16 Bit User Save	Update Rate	Background read
Display Format	Standard	Decimal Places	3
Coding	RW, PT, BU		

Parameter	22.016 *Parameter 00.016 Set-up*		
Short description	Defines the parameter to be shown in 00.016		
Mode	RFC-A		
Minimum	0.000	Maximum	30.999
Default	7.007	Units	
Type	16 Bit User Save	Update Rate	Background read
Display Format	Standard	Decimal Places	3
Coding	RW, PT, BU		

Parameter	22.017 *Parameter 00.017 Set-up*		
Short description	Defines the parameter to be shown in 00.017		
Mode	RFC-A		
Minimum	0.000	Maximum	30.999
Default	1.010	Units	
Type	16 Bit User Save	Update Rate	Background read
Display Format	Standard	Decimal Places	3
Coding	RW, PT, BU		

Parameter	22.018 *Parameter 00.018 Set-up*		
Short description	Defines the parameter to be shown in 00.018		
Mode	RFC-A		
Minimum	0.000	Maximum	30.999
Default	1.021	Units	
Type	16 Bit User Save	Update Rate	Background read
Display Format	Standard	Decimal Places	3
Coding	RW, PT, BU		

Parameter	22.019 *Parameter 00.019 Set-up*		
Short description	Defines the parameter to be shown in 00.019		
Mode	RFC-A		
Minimum	0.000	Maximum	30.999
Default	1.022	Units	
Type	16 Bit User Save	Update Rate	Background read
Display Format	Standard	Decimal Places	3
Coding	RW, PT, BU		

Parameter	22.020 *Parameter 00.020 Set-up*		
Short description	Defines the parameter to be shown in 00.020		
Mode	RFC-A		
Minimum	0.000	Maximum	30.999
Default	1.023	Units	
Type	16 Bit User Save	Update Rate	Background read
Display Format	Standard	Decimal Places	3
Coding	RW, PT, BU		

Parameter	22.021 *Parameter 00.021 Set-up*		
Short description	Defines the parameter to be shown in 00.021		
Mode	RFC-A		
Minimum	0.000	Maximum	30.999
Default	1.024	Units	
Type	16 Bit User Save	Update Rate	Background read
Display Format	Standard	Decimal Places	3
Coding	RW, PT, BU		

Parameter	22.022 *Parameter 00.022 Set-up*		
Short description	Defines the parameter to be shown in 00.022		
Mode	RFC-A		
Minimum	0.000	Maximum	30.999
Default	11.019	Units	
Type	16 Bit User Save	Update Rate	Background read
Display Format	Standard	Decimal Places	3
Coding	RW, PT, BU		

Parameter	22.023 *Parameter 00.023 Set-up*		
Short description	Defines the parameter to be shown in 00.023		
Mode	RFC-A		
Minimum	0.000	Maximum	30.999
Default	11.018	Units	
Type	16 Bit User Save	Update Rate	Background read
Display Format	Standard	Decimal Places	3
Coding	RW, PT, BU		

Parameter	22.024 *Parameter 00.024 Set-up*		
Short description	Defines the parameter to be shown in 00.024		
Mode	RFC-A		
Minimum	0.000	Maximum	30.999
Default	11.021	Units	
Type	16 Bit User Save	Update Rate	Background read
Display Format	Standard	Decimal Places	3
Coding	RW, PT, BU		

Parameter	22.025 *Parameter 00.025 Set-up*		
Short description	Defines the parameter to be shown in 00.025		
Mode	RFC-A		
Minimum	0.000	Maximum	30.999
Default	11.030	Units	
Type	16 Bit User Save	Update Rate	Background read
Display Format	Standard	Decimal Places	3
Coding	RW, PT, BU		

Parameter	22.026 *Parameter 00.026 Set-up*		
Short description	Defines the parameter to be shown in 00.026		
Mode	RFC-A		
Minimum	0.000	Maximum	30.999
Default	0.000	Units	
Type	16 Bit User Save	Update Rate	Background read
Display Format	Standard	Decimal Places	3
Coding	RW, PT, BU		

Parameter	22.027 *Parameter 00.027 Set-up*		
Short description	Defines the parameter to be shown in 00.027		
Mode	RFC-A		
Minimum	0.000	Maximum	30.999
Default	1.051	Units	
Type	16 Bit User Save	Update Rate	Background read
Display Format	Standard	Decimal Places	3
Coding	RW, PT, BU		

Parameter	22.028 *Parameter 00.028 Set-up*		
Short description	Defines the parameter to be shown in 00.028		
Mode	RFC-A		
Minimum	0.000	Maximum	30.999
Default	2.004	Units	
Type	16 Bit User Save	Update Rate	Background read
Display Format	Standard	Decimal Places	3
Coding	RW, PT, BU		

Parameter	22.029 *Parameter 00.029 Set-up*		
Short description	Defines the parameter to be shown in 00.029		
Mode	RFC-A		
Minimum	0.000	Maximum	30.999
Default	2.002	Units	
Type	16 Bit User Save	Update Rate	Background read
Display Format	Standard	Decimal Places	3
Coding	RW, PT, BU		

Parameter	22.030 *Parameter 00.030 Set-up*		
Short description	Defines the parameter to be shown in 00.030		
Mode	RFC-A		
Minimum	0.000	Maximum	30.999
Default	11.042	Units	
Type	16 Bit User Save	Update Rate	Background read
Display Format	Standard	Decimal Places	3
Coding	RW, PT, BU		

Parameter	22.031 *Parameter 00.031 Set-up*		
Short description	Defines the parameter to be shown in 00.031		
Mode	RFC-A		
Minimum	0.000	Maximum	30.999
Default	6.001	Units	
Type	16 Bit User Save	Update Rate	Background read
Display Format	Standard	Decimal Places	3
Coding	RW, PT, BU		

Parameter	22.032 *Parameter 00.032 Set-up*		
Short description	Defines the parameter to be shown in 00.032		
Mode	RFC-A		
Minimum	0.000	Maximum	30.999
Default	5.013	Units	
Type	16 Bit User Save	Update Rate	Background read
Display Format	Standard	Decimal Places	3
Coding	RW, PT, BU		

Parameter	22.033 *Parameter 00.033 Set-up*		
Short description	Defines the parameter to be shown in 00.033		
Mode	RFC-A		
Minimum	0.000	Maximum	30.999
Default	6.009	Units	
Type	16 Bit User Save	Update Rate	Background read
Display Format	Standard	Decimal Places	3
Coding	RW, PT, BU		

Parameter	22.034 *Parameter 00.034 Set-up*		
Short description	Defines the parameter to be shown in 00.034		
Mode	RFC-A		
Minimum	0.000	Maximum	30.999
Default	8.035	Units	
Type	16 Bit User Save	Update Rate	Background read
Display Format	Standard	Decimal Places	3
Coding	RW, PT, BU		

Parameter	22.035 *Parameter 00.035 Set-up*		
Short description	Defines the parameter to be shown in 00.035		
Mode	RFC-A		
Minimum	0.000	Maximum	30.999
Default	8.091	Units	
Type	16 Bit User Save	Update Rate	Background read
Display Format	Standard	Decimal Places	3
Coding	RW, PT, BU		

Parameter	22.036 *Parameter 00.036 Set-up*		
Short description	Defines the parameter to be shown in 00.036		
Mode	RFC-A		
Minimum	0.000	Maximum	30.999
Default	7.055	Units	
Type	16 Bit User Save	Update Rate	Background read
Display Format	Standard	Decimal Places	3
Coding	RW, PT, BU		

Parameter	22.037 *Parameter 00.037 Set-up*		
Short description	Defines the parameter to be shown in 00.037		
Mode	RFC-A		
Minimum	0.000	Maximum	30.999
Default	5.018	Units	
Type	16 Bit User Save	Update Rate	Background read
Display Format	Standard	Decimal Places	3
Coding	RW, PT, BU		

Parameter	22.038 *Parameter 00.038 Set-up*		
Short description	Defines the parameter to be shown in 00.038		
Mode	RFC-A		
Minimum	0.000	Maximum	30.999
Default	5.012	Units	
Type	16 Bit User Save	Update Rate	Background read
Display Format	Standard	Decimal Places	3
Coding	RW, PT, BU		

Parameter	22.039 *Parameter 00.039 Set-up*		
Short description	Defines the parameter to be shown in 00.039		
Mode	RFC-A		
Minimum	0.000	Maximum	30.999
Default	5.006	Units	
Type	16 Bit User Save	Update Rate	Background read
Display Format	Standard	Decimal Places	3
Coding	RW, PT, BU		

Parameter	22.040 *Parameter 00.040 Set-up*		
Short description	Defines the parameter to be shown in 00.040		
Mode	RFC-A		
Minimum	0.000	Maximum	30.999
Default	5.011	Units	
Type	16 Bit User Save	Update Rate	Background read
Display Format	Standard	Decimal Places	3
Coding	RW, PT, BU		

Parameter	22.041 *Parameter 00.041 Set-up*		
Short description	Defines the parameter to be shown in 00.041		
Mode	RFC-A		
Minimum	0.000	Maximum	30.999
Default	5.014	Units	
Type	16 Bit User Save	Update Rate	Background read
Display Format	Standard	Decimal Places	3
Coding	RW, PT, BU		

Parameter	22.042 *Parameter 00.042 Set-up*		
Short description	Defines the parameter to be shown in 00.042		
Mode	RFC-A		
Minimum	0.000	Maximum	30.999
Default	5.015	Units	
Type	16 Bit User Save	Update Rate	Background read
Display Format	Standard	Decimal Places	3
Coding	RW, PT, BU		

Parameter	22.043 *Parameter 00.043 Set-up*		
Short description	Defines the parameter to be shown in 00.043		
Mode	RFC-A		
Minimum	0.000	Maximum	30.999
Default	11.025	Units	
Type	16 Bit User Save	Update Rate	Background read
Display Format	Standard	Decimal Places	3
Coding	RW, PT, BU		

Parameter	22.044 *Parameter 00.044 Set-up*		
Short description	Defines the parameter to be shown in 00.044		
Mode	RFC-A		
Minimum	0.000	Maximum	30.999
Default	11.023	Units	
Type	16 Bit User Save	Update Rate	Background read
Display Format	Standard	Decimal Places	3
Coding	RW, PT, BU		

Parameter	22.045 *Parameter 00.045 Set-up*		
Short description	Defines the parameter to be shown in 00.045		
Mode	RFC-A		
Minimum	0.000	Maximum	30.999
Default	11.020	Units	
Type	16 Bit User Save	Update Rate	Background read
Display Format	Standard	Decimal Places	3
Coding	RW, PT, BU		

Parameter	22.046 *Parameter 00.046 Set-up*		
Short description	Defines the parameter to be shown in 00.046		
Mode	RFC-A		
Minimum	0.000	Maximum	30.999
Default	12.042	Units	
Type	16 Bit User Save	Update Rate	Background read
Display Format	Standard	Decimal Places	3
Coding	RW, PT, BU		

Parameter	22.047 *Parameter 00.047 Set-up*		
Short description	Defines the parameter to be shown in 00.047		
Mode	RFC-A		
Minimum	0.000	Maximum	30.999
Default	12.043	Units	
Type	16 Bit User Save	Update Rate	Background read
Display Format	Standard	Decimal Places	3
Coding	RW, PT, BU		

Parameter	22.048 *Parameter 00.048 Set-up*		
Short description	Defines the parameter to be shown in 00.048		
Mode	RFC-A		
Minimum	0.000	Maximum	30.999
Default	12.044	Units	
Type	16 Bit User Save	Update Rate	Background read
Display Format	Standard	Decimal Places	3
Coding	RW, PT, BU		

Parameter	22.049 *Parameter 00.049 Set-up*		
Short description	Defines the parameter to be shown in 00.049		
Mode	RFC-A		
Minimum	0.000	Maximum	30.999
Default	12.045	Units	
Type	16 Bit User Save	Update Rate	Background read
Display Format	Standard	Decimal Places	3
Coding	RW, PT, BU		

Parameter	22.050 *Parameter 00.050 Set-up*		
Short description	Defines the parameter to be shown in 00.050		
Mode	RFC-A		
Minimum	0.000	Maximum	30.999
Default	12.046	Units	
Type	16 Bit User Save	Update Rate	Background read
Display Format	Standard	Decimal Places	3
Coding	RW, PT, BU		

Parameter	22.051 *Parameter 00.051 Set-up*		
Short description	Defines the parameter to be shown in 00.051		
Mode	RFC-A		
Minimum	0.000	Maximum	30.999
Default	12.047	Units	
Type	16 Bit User Save	Update Rate	Background read
Display Format	Standard	Decimal Places	3
Coding	RW, PT, BU		

Parameter	22.052 *Parameter 00.052 Set-up*		
Short description	Defines the parameter to be shown in 00.052		
Mode	RFC-A		
Minimum	0.000	Maximum	30.999
Default	0.000	Units	
Type	16 Bit User Save	Update Rate	Background read
Display Format	Standard	Decimal Places	3
Coding	RW, PT, BU		

Parameter	22.053 *Parameter 00.053 Set-up*		
Short description	Defines the parameter to be shown in 00.053		
Mode	RFC-A		
Minimum	0.000	Maximum	30.999
Default	12.050	Units	
Type	16 Bit User Save	Update Rate	Background read
Display Format	Standard	Decimal Places	3
Coding	RW, PT, BU		

Parameter	22.054 *Parameter 00.054 Set-up*		
Short description	Defines the parameter to be shown in 00.054		
Mode	RFC-A		
Minimum	0.000	Maximum	30.999
Default	12.051	Units	
Type	16 Bit User Save	Update Rate	Background read
Display Format	Standard	Decimal Places	3
Coding	RW, PT, BU		

Parameter	22.055 *Parameter 00.055 Set-up*		
Short description	Defines the parameter to be shown in 00.055		
Mode	RFC-A		
Minimum	0.000	Maximum	30.999
Default	12.041	Units	
Type	16 Bit User Save	Update Rate	Background read
Display Format	Standard	Decimal Places	3
Coding	RW, PT, BU		

Parameter	22.056 *Parameter 00.056 Set-up*		
Short description	Defines the parameter to be shown in 00.056		
Mode	RFC-A		
Minimum	0.000	Maximum	30.999
Default	10.020	Units	
Type	16 Bit User Save	Update Rate	Background read
Display Format	Standard	Decimal Places	3
Coding	RW, PT, BU		

Parameter	22.057 *Parameter 00.057 Set-up*		
Short description	Defines the parameter to be shown in 00.057		
Mode	RFC-A		
Minimum	0.000	Maximum	30.999
Default	10.021	Units	
Type	16 Bit User Save	Update Rate	Background read
Display Format	Standard	Decimal Places	3
Coding	RW, PT, BU		

Parameter	22.058 *Parameter 00.058 Set-up*		
Short description	Defines the parameter to be shown in 00.058		
Mode	RFC-A		
Minimum	0.000	Maximum	30.999
Default	10.022	Units	
Type	16 Bit User Save	Update Rate	Background read
Display Format	Standard	Decimal Places	3
Coding	RW, PT, BU		

Parameter	22.059 *Parameter 00.059 Set-up*		
Short description	Defines the parameter to be shown in 00.059		
Mode	RFC-A		
Minimum	0.000	Maximum	30.999
Default	11.047	Units	
Type	16 Bit User Save	Update Rate	Background read
Display Format	Standard	Decimal Places	3
Coding	RW, PT, BU		

Parameter	22.060 *Parameter 00.060 Set-up*		
Short description	Defines the parameter to be shown in 00.060		
Mode	RFC-A		
Minimum	0.000	Maximum	30.999
Default	11.048	Units	
Type	16 Bit User Save	Update Rate	Background read
Display Format	Standard	Decimal Places	3
Coding	RW, PT, BU		

Parameter	22.061 *Parameter 00.061 Set-up*		
Short description	Defines the parameter to be shown in 00.061		
Mode	RFC-A		
Minimum	0.000	Maximum	30.999
Default	0.000	Units	
Type	16 Bit User Save	Update Rate	Background read
Display Format	Standard	Decimal Places	3
Coding	RW, PT, BU		

Parameter	22.062 *Parameter 00.062 Set-up*		
Short description	Defines the parameter to be shown in 00.062		
Mode	RFC-A		
Minimum	0.000	Maximum	30.999
Default	0.000	Units	
Type	16 Bit User Save	Update Rate	Background read
Display Format	Standard	Decimal Places	3
Coding	RW, PT, BU		

Parameter	22.063 *Parameter 00.063 Set-up*		
Short description	Defines the parameter to be shown in 00.063		
Mode	RFC-A		
Minimum	0.000	Maximum	30.999
Default	0.000	Units	
Type	16 Bit User Save	Update Rate	Background read
Display Format	Standard	Decimal Places	3
Coding	RW, PT, BU		

Parameter	22.064 *Parameter 00.064 Set-up*		
Short description	Defines the parameter to be shown in 00.064		
Mode	RFC-A		
Minimum	0.000	Maximum	30.999
Default	0.000	Units	
Type	16 Bit User Save	Update Rate	Background read
Display Format	Standard	Decimal Places	3
Coding	RW, PT, BU		

Parameter	22.065 *Parameter 00.065 Set-up*		
Short description	Defines the parameter to be shown in 00.065		
Mode	RFC-A		
Minimum	0.000	Maximum	30.999
Default	3.010	Units	
Type	16 Bit User Save	Update Rate	Background read
Display Format	Standard	Decimal Places	3
Coding	RW, PT, BU		

Parameter	22.066 *Parameter 00.066 Set-up*		
Short description	Defines the parameter to be shown in 00.066		
Mode	RFC-A		
Minimum	0.000	Maximum	30.999
Default	3.011	Units	
Type	16 Bit User Save	Update Rate	Background read
Display Format	Standard	Decimal Places	3
Coding	RW, PT, BU		

Parameter	22.067 *Parameter 00.067 Set-up*		
Short description	Defines the parameter to be shown in 00.067		
Mode	RFC-A		
Minimum	0.000	Maximum	30.999
Default	3.079	Units	
Type	16 Bit User Save	Update Rate	Background read
Display Format	Standard	Decimal Places	3
Coding	RW, PT, BU		

Parameter	22.068 *Parameter 00.068 Set-up*		
Short description	Defines the parameter to be shown in 00.068		
Mode	RFC-A		
Minimum	0.000	Maximum	30.999
Default	0.000	Units	
Type	16 Bit User Save	Update Rate	Background read
Display Format	Standard	Decimal Places	3
Coding	RW, PT, BU		

Parameter	22.069 *Parameter 00.069 Set-up*		
Short description	Defines the parameter to be shown in 00.069		
Mode	RFC-A		
Minimum	0.000	Maximum	30.999
Default	5.040	Units	
Type	16 Bit User Save	Update Rate	Background read
Display Format	Standard	Decimal Places	3
Coding	RW, PT, BU		

Parameter	22.070 *Parameter 00.070 Set-up*		
Short description	Defines the parameter to be shown in 00.070		
Mode	RFC-A		
Minimum	0.000	Maximum	30.999
Default	14.001	Units	
Type	16 Bit User Save	Update Rate	Background read
Display Format	Standard	Decimal Places	3
Coding	RW, PT, BU		

Parameter	22.071 *Parameter 00.071 Set-up*		
Short description	Defines the parameter to be shown in 00.071		
Mode	RFC-A		
Minimum	0.000	Maximum	30.999
Default	14.010	Units	
Type	16 Bit User Save	Update Rate	Background read
Display Format	Standard	Decimal Places	3
Coding	RW, PT, BU		

Parameter	22.072 *Parameter 00.072 Set-up*		
Short description	Defines the parameter to be shown in 00.072		
Mode	RFC-A		
Minimum	0.000	Maximum	30.999
Default	14.011	Units	
Type	16 Bit User Save	Update Rate	Background read
Display Format	Standard	Decimal Places	3
Coding	RW, PT, BU		

Parameter	22.073 *Parameter 00.073 Set-up*		
Short description	Defines the parameter to be shown in 00.073		
Mode	RFC-A		
Minimum	0.000	Maximum	30.999
Default	14.006	Units	
Type	16 Bit User Save	Update Rate	Background read
Display Format	Standard	Decimal Places	3
Coding	RW, PT, BU		

Parameter	22.074 *Parameter 00.074 Set-up*		
Short description	Defines the parameter to be shown in 00.074		
Mode	RFC-A		
Minimum	0.000	Maximum	30.999
Default	14.013	Units	
Type	16 Bit User Save	Update Rate	Background read
Display Format	Standard	Decimal Places	3
Coding	RW, PT, BU		

Parameter	22.075 *Parameter 00.075 Set-up*		
Short description	Defines the parameter to be shown in 00.075		
Mode	RFC-A		
Minimum	0.000	Maximum	30.999
Default	14.014	Units	
Type	16 Bit User Save	Update Rate	Background read
Display Format	Standard	Decimal Places	3
Coding	RW, PT, BU		

Parameter	22.076 *Parameter 00.076 Set-up*		
Short description	Defines the parameter to be shown in 00.076		
Mode	RFC-A		
Minimum	0.000	Maximum	30.999
Default	10.037	Units	
Type	16 Bit User Save	Update Rate	Background read
Display Format	Standard	Decimal Places	3
Coding	RW, PT, BU		

Parameter	22.077 *Parameter 00.077 Set-up*		
Short description	Defines the parameter to be shown in 00.077		
Mode	RFC-A		
Minimum	0.000	Maximum	30.999
Default	11.032	Units	
Type	16 Bit User Save	Update Rate	Background read
Display Format	Standard	Decimal Places	3
Coding	RW, PT, BU		

Parameter	22.078 *Parameter 00.078 Set-up*		
Short description	Defines the parameter to be shown in 00.078		
Mode	RFC-A		
Minimum	0.000	Maximum	30.999
Default	11.029	Units	
Type	16 Bit User Save	Update Rate	Background read
Display Format	Standard	Decimal Places	3
Coding	RW, PT, BU		

Parameter	22.079 *Parameter 00.079 Set-up*		
Short description	Defines the parameter to be shown in 00.079		
Mode	RFC-A		
Minimum	0.000	Maximum	30.999
Default	11.031	Units	
Type	16 Bit User Save	Update Rate	Background read
Display Format	Standard	Decimal Places	3
Coding	RW, PT, BU		

Parameter	22.080 *Parameter 00.080 Set-up*		
Short description	Defines the parameter to be shown in 00.080		
Mode	RFC-A		
Minimum	0.000	Maximum	30.999
Default	0.000	Units	
Type	16 Bit User Save	Update Rate	Background read
Display Format	Standard	Decimal Places	3
Coding	RW, PT, BU		

Trips

Mode: RFC-A

Trip 0 (10.020) to *Trip 9* (10.029) store the most recent 10 trips that have occurred where Trip *Trip 0* (10.020) is the most recent and *Trip 9* (10.029) is the oldest. When a new trip occurs it is written to *Trip 0* (10.020) and all the other trips move down the log, with the oldest being lost.

The date and time when each trip occurs are also stored in the date and time log, i.e. *Trip 0 Date* (10.041) to *Trip 9 Time* (10.060). The date and time are taken from *Date* (06.016) and *Time* (06.017) (See *Date/Time Selector* (06.019)). Some trips have sub-trip numbers which give more detail about the reason for the trip. If a trip has a sub-trip number its value is stored in the sub-trip log, i.e. *Trip 0 Sub-trip Number* (10.070) to *Trip 9 Sub-trip Number* (10.079). If the trip does not have a sub-trip number then zero is stored in the sub-trip log.

Trip categories and priorities
Trips are grouped into the categories given in the table below. A trip can only occur when the drive is not tripped, or if it is already tripped and the new trip has a higher priority than the active trip (i.e. lower priority number). Unless otherwise stated a trip cannot be reset until 1.0s after it has been initiated.

Priority	Category	Trips	Comments
1	Internal faults	HF01 - HF19	These are fatal problems that cannot be reset. All drive features are inactive after any of these trips occur. If a basic keypad is fitted it will show the trip, but the keypad will not function. These trips are not stored in the trip log.
1	Stored HF trip	*Stored HF*	This trip cannot be cleared unless 1299 is entered into *Parameter mm.000* (mm.000) and a reset is initiated.
2	Non-resettable trips	Trip numbers 218 - 247 and *Slot1 HF*	These trips cannot be reset.
3	Volatile memory failure	*EEPROM Fail*	This can only be reset if *Parameter mm.000* (mm.000) is set to 1233 or 1244, or if *Load Defaults* (11.043) is set to a non-zero value
4	Non-volatile media trips	Trip numbers 174, 175 and 177 - 188	These trips are priority 5 during power-up
5	Trips with extended reset times	*OI ac* and *OI Brake*	These trips cannot be reset until 10s after the trip was initiated.
5	Phase loss and d.c. link power circuit protection	*Phase Loss* and *OHt dc bus*	The drive will attempt to stop the motor before tripping if a *Phase Loss*.000 trip occurs unless this feature has been disabled (see *Action On Trip Detection* (10.037)). The drive will always attempt to stop the motor before tripping if an *OHt dc bus* occurs.
5	Standard trips	All other trips	

Trips {HF01} to {HF19} are internal faults that do not have trip numbers. If one of these trips occurs, the main drive processor has detected an irrecoverable error. All drive functions are stopped and the trip message will be displayed on the drive keypad. The error can only be reset by powering the drive down and up again. The table below gives the reasons for internal faults and their corresponding trip

Trip	Reason
{HF01}	CPU hardware fault during exception processing
{HF02}	CPU memory management fault is an exception that occurs because of a memory protection related fault
{HF03}	CPU has detected a Bus Fault. A Bus Fault is an exception that occurs because of a memory related fault for an instruction or data memory transaction. This might be from an error detected on a bus in the memory system.
{HF04}	CPU has detected a usage fault: A Usage Fault is an exception that occurs because of a fault related to instruction execution. This includes: • an undefined instruction • an illegal unaligned access • invalid state on instruction execution • an error on exception return. The following can cause a Usage Fault when the core is configured to report them: • an unaligned address on word and half word memory access • division by zero.
{HF05}	Reserved
{HF06}	Reserved
{HF07}	Watchdog failure
{HF08}	CPU Interrupt crash. Interrupt crash level indicated by subtrip number.
{HF09}	Free store overflow
{HF10}	Reserved
{HF11}	The *HF11* trip indicates that a non-volatile memory comms error has occurred.

Sub-trip	Reason	Recommended action
1	Non-volatile memory comms error.	Hardware fault – contact the supplier of the drive.
2	EEPROM size is incompatible with the user firmware.	After 1min the drive will go to its bootloader. Re-program drive with compatible user firmware using UniMConnect

{HF12} Stack overflow

Sub-trip	Reason
1	User program or derivative background stack overflow
2	User program or derivative timed stack overflow
3	Main system interrupt stack overflow
4	Main system background stack overflow

{HF13}	Reserved
{HF14}	Reserved
{HF15}	Reserved
{HF16}	RTOS error (the background task has returned)
{HF17}	Reserved
	The *HF18* trip indicates that the internal flash memory has failed when writing option module parameter data. The reason for the trip can be identified by the sub-trip number.

{HF18}	**Sub-trip**	**Reason**
	1	Option module initialization timed out
	2	Programming error while writing menu in flash
	3	Erase flash block containing setup menus failed
	4	Erase flash block containing application menus failed
	5	Incorrect setup menu CRC contained in flash
	6	Incorrect application menu CRC contained in flash
{HF19}	The *HF19* trip indicates that the drive firmware is partially or completely deleted. The drive is now in its bootloader and is waiting for a new image to be downloaded using UniMConnect. Once a new image is downloaded, the drive can run normally.	

When the drive is subsequently powered up a *Stored HF* trip is initiated where the sub-trip number is the number of the HF trip that last occurred. This trip will occur at every power-up until it is reset. The trip can only be reset by first entering 1299 into *Parameter mm.000* (mm.000). If the drive is powered up and a *Stored HF* trip occurs, *Onboard User Program: Enable* (11.047) is reset to zero to prevent the on-board user program from running. This ensures that the user program can be changed or erased in case it causes an HF trip at every power-up.

Trip descriptions
Trips shown in the table below can be generated either from the drive control system or from the power system. The sub-trip number which is in the form xxyzz is used to identify the source of the trip. The digits xx are 00 for a trip generated by the control system or the number of a power module if generated by the power system. If the drive is not a multi-power module drive then xx will always have a value of 1 if the trip is related to the power system. The y digit is used to identify the location of a trip which is generated by a rectifier module connected to a power module. Where the y digit is relevant it will have a value of 1 or more, otherwise it will be 0. The zz digits give the reason for the trip and are defined in each trip description.

Over Volts	*OHt dc bus*
OI ac	*Phase Loss*
OI Brake	*LF Power Comms*
PSU	*OI Snubber*
OHt Inverter	*Temp Feedback*
OHt Power	*Power Data*

Trips Summary (numerical order)

Value	Trip
0	None
1	Reserved
2	Over Volts
3	OI ac
4	OI Brake
5	PSU
6	External Trip
7	Over Speed
8	User OI ac
9	Reserved
10	Reserved
11	Autotune 1
12	Reserved
13	Autotune 3
14	Reserved
15	Reserved
16	Reserved
17	Reserved
18	Autotune Stopped
19	Brake R Too Hot
20	Motor Too Hot
21	OHt Inverter
22	OHt Power
23	Reserved
24	Thermistor
25	Th Short Circuit
26	I/O Overload
27	OHt dc bus
28	An Input 1 Loss
29	An Input 2 Loss
30	Watchdog
31	EEPROM Fail
32	Phase Loss
33	Resistance
34	Keypad Mode
35	Control Word
36	User Save
37	Power Down Save
38	Reserved
39	An Input 3 Loss
40	User Trip 40
41	User Trip 41
42	User Trip 42
43	User Trip 43
44	User Trip 44
45	User Trip 45
46	User Trip 46
47	User Trip 47
48	User Trip 48
49	User Trip 49
50	User Trip 50
51	User Trip 51
52	User Trip 52
53	User Trip 53
54	User Trip 54
55	User Trip 55
56	User Trip 56
57	User Trip 57
58	User Trip 58
59	User Trip 59
60	User Trip 60
61	User Trip 61
62	User Trip 62
63	User Trip 63
64	User Trip 64
65	User Trip 65
66	User Trip 66
67	User Trip 67
68	User Trip 68
69	User Trip 69
70	User Trip 70
71	User Trip 71
72	User Trip 72
73	User Trip 73
74	User Trip 74
75	User Trip 75

76	User Trip 76
77	User Trip 77
78	User Trip 78
79	User Trip 79
80	User Trip 80
81	User Trip 81
82	User Trip 82
83	User Trip 83
84	User Trip 84
85	User Trip 85
86	User Trip 86
87	User Trip 87
88	User Trip 88
89	User Trip 89
90	LF Power Comms
91	Reserved
92	OI Snubber
93	Power Comms
94	Reserved
95	Reserved
96	User Prog Trip
97	Data Changing
98	Out Phase Loss
99	Reserved
100	Reset
101	Reserved
102	Reserved
103	Reserved
104	Reserved
105	Reserved
106	Reserved
107	Reserved
108	Reserved
109	Reserved
110	DCCT Ref
111	Reserved
112	User Trip 112
113	User Trip 113
114	User Trip 114
115	User Trip 115
116	User Trip 116
117	User Trip 117
118	User Trip 118
119	User Trip 119
120	User Trip 120
121	User Trip 121
122	User Trip 122
123	User Trip 123
124	User Trip 124
125	User Trip 125
126	User Trip 126
127	User Trip 127
128	User Trip 128
129	User Trip 129
130	User Trip 130
131	User Trip 131
132	User Trip 132
133	User Trip 133
134	User Trip 134
135	User Trip 135
136	User Trip 136
137	User Trip 137
138	User Trip 138
139	User Trip 139
140	User Trip 140
141	User Trip 141
142	User Trip 142
143	User Trip 143
144	User Trip 144
145	User Trip 145
146	User Trip 146
147	User Trip 147
148	User Trip 148
149	User Trip 149
150	User Trip 150
151	User Trip 151
152	User Trip 152

153	User Trip 153
154	User Trip 154
155	User Trip 155
156	User Trip 156
157	User Trip 157
158	User Trip 158
159	User Trip 159
160	User Trip 160
161	User Trip 161
162	User Trip 162
163	User Trip 163
164	User Trip 164
165	User Trip 165
166	User Trip 166
167	User Trip 167
168	Reserved
169	Reserved
170	Reserved
171	Reserved
172	Reserved
173	Fan fail
174	Reserved
175	Card Product
176	Reserved
177	Reserved
178	Card Busy
179	Card Data Exists
180	Card Option
181	Card Read Only
182	Card Error
183	Card No Data
184	Card Full
185	Card Access
186	Card Rating
187	Card Drive Mode
188	Card Compare
189	An Input 1 OI
190	An Input 2 OI
191	An Input 3 OI
192	Reserved
193	Reserved
194	Reserved
195	Reserved
196	Reserved
197	Reserved
198	Reserved
199	Destination
200	Slot1 HF
201	Slot1 Watchdog
202	Slot1 Error
203	Slot1 Not Fitted
204	Slot1 Different
205	Reserved
206	Reserved
207	Reserved
208	Reserved
209	Reserved
210	Reserved
211	Reserved
212	Reserved
213	Reserved
214	Reserved
215	Reserved
216	Reserved
217	Reserved
218	Temp Feedback
219	OHt Control
220	Power Data
221	Stored HF
222	Reserved
223	Reserved
224	Reserved
225	Reserved
226	Soft Start
227	Sub-array RAM
228	Output phase U
229	Output phase V

230	Output phase W
231	I cal. range
232	Drive config
233	Reserved
234	STO error
235	Power Board HF
236	No power board
237	FW incompatible
238	Reserved
239	Reserved
240	Reserved
241	Reserved
242	Reserved
243	Reserved
244	Reserved
245	Power Boot Mode
246	Derivative ID
247	File changed
248	Derivative Image
249	User Program
250	Hot Rect/Brake
251	Reserved
252	Reserved
253	Reserved
254	Reserved
255	Reset Logs

Trips (alphabetical order)

Trip	***An Input 1 Loss***
Value	28
Short description	Current loop loss on analog input 1

Indicates that a current loss was detected in current mode on Analog Input 1. In 4-20mA and 20-4mA modes, loss of input is detected if the current falls below 3mA. See *Analog Input 1 Mode* (07.007) for further details.

Recommended actions:

- Check control wiring is correct.
- Check control wiring is undamaged.
- Check *Analog Input 1 Mode* (07.007).
- Check that the current signal is present and greater than 3mA

Trip	***An Input 1 OI***
Value	189
Short description	Current loop overload on analog input 1

If the input current is detected as being > 23mA the input impedance is increased by the hardware to protect the shunt resistor used to measure the current. This action is detected by the firmware, at which point the shunt is disconnected and a *An Input 1 OI* trip generated.

Recommended actions:

- Check control wiring is correct.
- Check control wiring is undamaged.
- Check *Analog Input 1 Mode* (07.007).

Trip	***An Input 2 Loss***
Value	29
Short description	Current loop loss on analog input 2

Indicates that a current loss was detected in current mode on Analog Input 2. In 4-20mA and 20-4mA modes, loss of input is detected if the current falls below 3mA. See *Analog Input 2 Mode* (07.011) for further details.

Recommended actions:

- Check control wiring is correct.
- Check control wiring is undamaged.
- Check *Analog Input 2 Mode* (07.011).
- Check that the current signal is present and greater than 3mA

Trip	***An Input 2 OI***
Value	190
Short description	Current loop overload on analog input 2

If the input current is detected as being > 23mA the input impedance is increased by the hardware to protect the shunt resistor used to measure the current. This action is detected by the firmware, at which point the shunt is disconnected and a *An Input 2 OI* trip generated.

Recommended actions:

- Check control wiring is correct.
- Check control wiring is undamaged.
- Check *Analog Input 2 Mode* (07.011).

Trip	*An Input 3 Loss*
Value	39
Short description	Current loop loss on Analog input 3 (Commander ID30x only)

Available on Commander ID30x drives only.

Trip	*An Input 3 OI*
Value	191
Short description	Current loop overload on analog input 3 (Commander ID30x only)

Not supported

Trip	*Autotune 1*
Value	11
Short description	Autotune trip 1

The drive has tripped during an Autotune. The cause of the trip can be identified by the sub-trip number.

Sub-trip	Reason
1	Reserved
2	The motor did not reach the required speed during a rotating auto-tune or mechanical load measurement.

Recommended actions:

- Ensure the motor is free to run e.g. mechanical brake is released.

Trip	*Autotune 3*
Value	13
Short description	Autotune trip 3

The drive has tripped during a rotating auto-tune or mechanical load measurement. The cause of the trip can be identified from the associated sub-trip number.

Sub-trip	Reason
1	Measured inertia has exceeded the parameter range during a mechanical load measurement.
2	Reserved
3	The mechanical load test has been unable to identify the motor inertia.

Recommended actions:

- Check motor cable wiring is correct.

Recommended actions for sub-trip 3:

- Increase the test level.
- If the test was carried out at standstill repeat the test with the motor rotating within the recommended speed range.

Trip	*Autotune Stopped*
Value	18
Short description	The Autotune was interrupted

The drive was prevented from completing an auto-tune, because either the Final drive enable or the Final drive run were removed.

Recommended actions:

- Check the drive STO signals (terminals 31 & 34 on sizes 1 to 4 and terminals 31 & 35 on frames sizes 5 and above) are active during the auto-tune.
- Check that there is either a Run Forward command (*Digital Input 3 State* (08.003) and *Run Forward* (06.030) are both at 1), or a Run Reverse command (*Digital Input 4 State* (08.004) and *Run Reverse* (06.032) are both at 1) during the auto-tune. If *Enable Sequencer Latching* (06.040) = 1, check also that *Digital I/O 2 State* (08.002) and *Not Stop* (06.039) are both at 1.

Trip	*Brake R Too Hot*
Value	19
Short description	Brake resistor over temperature

This trip indicates that braking resistor overload has timed out. The value in *Braking Resistor Thermal Accumulator* (10.039) is calculated using *Braking Resistor Rated Power* (10.030), *Braking Resistor Thermal Time Constant* (10.031) and *Braking Resistor Resistance* (10.061). This trip is initiated when *Braking Resistor Thermal Accumulator* (10.039) reaches 100%.

Recommended actions:

- Ensure the values entered in *Braking Resistor Rated Power* (10.030), *Braking Resistor Thermal Time Constant* (10.031) and *Braking Resistor Resistance* (10.061) are correct.
- If an external thermal protection device is being used and the braking resistor software overload protection is not required, set *Braking Resistor Rated Power* (10.030), *Braking Resistor Thermal Time Constant* (10.031) and *Braking Resistor Resistance* (10.061) to 0 to disable the trip.

Trip	*Card Access*
Value	185
Short description	Communication failure with NV media card detected

A communication failure has occurred with a NV media card. If this occurs during a data transfer to the card then the file being written may be corrupted. If this occurs when data is being transferred from the card then the data transfer may be incomplete. If a parameter file is transferred to the drive and this trip occurs during the transfer the parameters are not saved to non-volatile memory, and so the original parameters can be restored by powering the drive down and up again.

Recommended actions:

- Check the NV media card is installed / located correctly.
- Replace the NV media card.

Trip	*Card Busy*
Value	178
Short description	NV media card in use

An attempt has been made to access a file on a NV media card, but the file is already being accessed be an Option Module. No data is transferred.

Recommended actions:

- Wait for the Option Module to finish accessing the NV media card and re-attempt the required function.

Trip	*Card Compare*
Value	188
Short description	NV media card data and drive data is not the same

A compare has been carried out between a file on a NV media card and the drive and these are different and no other NV media card related trips have occurred.

Recommended actions:

- Set Pr *mm.000* to 0 to reset the trip.
- Check to ensure the correct data block on the NV media card has been used for the compare.

Trip	*Card Data Exists*
Value	179
Short description	NV media card data already exists

An attempt has been made to store data on a NV media card, but the file already exists. No data is transferred. The file should be erased first to prevent this trip.

Recommended actions:

- Erase the data in data location.
- Write data to an alternative data location.

Trip	*Card Drive Mode*
Value	187
Short description	Transfer of data between drives operating in different modes detected

This trip is produced during a compare if the drive mode in the file on the NV media card is different from the current drive mode and the file is a parameter file. This trip is also produced if an attempt is made to transfer a parameter file where the source and target drive modes are different and the drive mode is outside the range allowed for the target drive.

Recommended actions:

- Ensure the destination drive supports the drive operating mode in the parameter file.
- Clear the value in Pr *mm.000* and reset the drive.
- Ensure destination drive operating mode is the same as the source parameter file.

Trip	*Card Error*
Value	182
Short description	NV media card data structure error detected

An attempt has been made to access a NV media card, but an error has been detected in the data structure on the card. Resetting this trip will cause the drive to erase the <MCDF> folder from the NV media card (if it exists) and create the correct folder structure. On an SD card, whilst this trip is still present, missing directories will be created, and if the header file is missing it will be created. The following sub-trip numbers are used with this trip.

Sub-trip	Reason
1	The required folder and file structure is not present.
2	The <000> file is corrupted.
3	Two or more files in the <MCDF\> folder have the same file identification number.

Recommended actions:

- Erase all the data block and re-attempt the process.
- Ensure the card is located correctly.
- Replace the NV media card.

Trip	*Card Full*
Value	184
Short description	NV media card is full

An attempt has been made to write to a NV media card, but there is insufficient space available. No data is transferred.

Recommended actions:

- Delete a data block or the entire NV media card to create space.
- Replace the NV media card.

Trip	*Card No Data*
Value	183
Short description	Attempt to read non-existant data detected

An attempt has been made to access a non-existent file on a NV media card. No data is transferred.

Recommended actions:

- Ensure data block number is correct.

Trip	*Card Option*
Value	180
Short description	Option difference detected

A parameter file has been transferred from a NV media card to the drive, but the option module fitted is different between source and target drives. This trip does not stop the data transfer, but is a warning that the data for the option module will be set to the default values and not the values from the card. This trip also applies if a compare is performed between a parameter file on a card and the drive and the option module fitted is different between the source and target.

Recommended actions:

- Ensure the correct option modules are installed.
- Press the red reset button to acknowledge that the parameters for the option module installed will be at their default values.
- This trip can be suppressed by setting Pr *mm.000* to 9666 and resetting the drive.

Trip	*Card Product*
Value	175
Short description	Product difference detected

Product or derivative are incompatible between the source and target drives.

Sub-trip	Reason
1	If *Drive Derivative* (11.028) is different between the source and target drives. This trip is initiated either at power-up or when the SDcard is accessed. This trip can be reset and data can be transferred in either direction between the drive and the card.
2	If *Product Type* (11.063) is different between the source and target drives or the file is corrupted or incompatible. This trip is initiated either at power-up or when the SDcard is accessed. This trip can be reset but no data are transferred in either direction between the drive and the card.
3	Reserved

Recommended actions:

Sub-trip	Actions
1	• Use a different NV media card or choose a file compatible between the source and target drives. • This trip can be suppressed by setting Pr *mm.000* to 9666 and resetting the drive.
2	• Use a different NV media card or choose a file compatible between the source and target drives.

Trip	*Card Rating*
Value	186
Short description	Transfer of data between drives of different ratings detected

A parameter file has been transferred from a NV media card to the drive, but the current and/or voltage rating are different between source and target drive. This trip does not stop the data transfer, but is a warning that the data for rating dependent parameters may not be the same on the target as the source drive. This trip also applies if a compare (using Pr *mm.000* set to 8yyy) is performed between a parameter file on the card on the drive.

Recommended actions:

- Reset the drive to clear the trip.
- This trip can be suppressed by setting Pr *mm.000* to 9666 and resetting the drive.

Trip	*Card Read Only*
Value	181
Short description	Attempt to overwrite protected data detected

An attempt has been made to modify data on a read-only NV media card or to modify a read-only file (i.e. erase the card, erase a file or create a file). No data is transferred.

Recommended actions:

- Clear the read only flag by setting Pr *mm.000* to 9777 and reset the drive. This will clear the read only flag for all data blocks in the NV media card.

Trip	*Control Word*
Value	35
Short description	Control word trip (bit 12)

This trip is initiated by setting bit 12 on the control word in *Control Word* (06.042) when the control word is enabled (*Control Word Enable* (06.043) = On).

Recommended actions:

- Check the value of *Control Word* (06.042).
- Disable the control word in *Control Word Enable* (06.043).

Trip	*Data Changing*
Value	97
Short description	Drive has become active while data is being updated

A user action or a file system write is active that is changing the drive parameters and the drive has become active, i.e. *Drive Active* (10.002) = 1. The user actions that change drive parameters are loading defaults, changing drive mode, or transferring data from an NV memory card to the drive. The file system actions that will cause this trip to be initiated if the drive is enabled during the transfer are writing a parameter or macro file to the drive, or transferring a user program to the drive. It should be noted that none of these actions can be started if the drive is active, and so the trip only occurs if the action is started and then the drive is enabled.

Recommended actions:

- Ensure the drive is not enabled when one of the following is being carried out:
  - Loading defaults
  - Transferring user programs

Trip	***DCCT Ref***
Value	110
Short description	DC Current transformer failure (size 5 and above)

DCCT reference out of range (size 5 and above only).

Recommended actions:

- Hardware fault - contact the supplier of the drive.

Trip	***Derivative ID***
Value	246
Short description	Derivative Image error

An error has been detected in the derivative product image. The sub-trip indicated the reason for the trip.

Sub-trip	**Reason**	**Comments**
1	The derivative image is missing or is invalid	Occurs when the drive powers-up. Load valid derivative image matching the control board hardware.
2	The derivative image does not match the control board hardware	Occurs when the drive powers-up. Load valid derivative image matching the control board hardware.
3	The derivative image has been changed for an image with a different derivative number.	Occurs when the drive powers-up or the image is programmed. The image tasks will not run.

Trip	***Derivative Image***
Value	248
Short description	Derivative program error

An error has been detected in the derivative product image. The sub-trip indicates the reason for the trip.

Sub-trip	Reason	Comments
1	Divide by zero	
2	Undefined trip	
3	Attempted fast parameter access set-up with non-existent parameter	
4	Attempted access to non-existent parameter	
5	Attempted write to read-only parameter	
6	Attempted and over-range write	
7	Attempted read from write-only parameter	
30	The image has failed because either its CRC is incorrect, or there are less than 6 bytes in the image or the image header version is less than 5.	Occurs when the drive powers-up or the image is programmed. The image tasks will not run.
31	The image requires more RAM for heap and stack than can be provided by the drive.	As 30.
32	The image requires an OS function call that is higher than the maximum allowed.	As 30.
33	The ID code within the image is not valid	As 30.
34	The derivative image has been changed for an image with a different derivative number.	As 30.
40	The timed task has not completed in time and has been suspended.	
41	Undefined function called, i.e. a function in the host system vector table that has not been assigned.	
51	Core menu customisation table CRC check failed	As 30.
52	Customisable menu table CRC check failed	As 30.
53	Customisable menu table changed	Occurs when the drive powers-up or the image is programmed and the table has changed. Defaults are loaded for the derivative menu and the trip will keep occurring until drive parameters are saved.
61	The option module fitted in slot 1 is not allowed with the derivative image.	As 30.
70	An option module that is required by the derivative image is not fitted in any slot.	As 30.
71	An option module specifically required to be fitted in slot 1 not present.	As 30.
80	*Image is not compatible with the control board	Initiated from within the image code.

81	*Image is not compatible with the control board serial number	As 80.

Recommended actions:

- Contact the supplier of the drive.

Trip	*Destination*
Value	199
Short description	A parameter is being changed by more than 1 routing destination

This trip indicates that destination output parameters of two or more logic functions within the drive are writing to the same parameter.

Recommended actions:

- Set Pr *mm.000* to "Destinations" or 12001 and check all visible parameters in all menus for parameter write conflicts

Trip	*Drive config*
Value	232
Short description	Incorrect configuration data

The power stage hardware does not match the drive configuration data.

Sub-trip	Reason
1	The power stage hardware does not match the drive configuration data (size 5 and above).
2	The power stage hardware detected is invalid.
3	The power stage hardware does not match the drive configuration data (Sizes 1 - 4)

Recommended actions:

- Return the drive to the supplier.

Trip	*EEPROM Fail*
Value	31
Short description	Non-volatile memory failure

This trip indicates that default parameters have been loaded because of one of the reasons given below.

Sub-trip	Reason
1	The most significant digit of the internal parameter database version number has changed.
2	The CRC's applied to the parameter data stored in internal non-volatile memory indicate that a valid set of parameters cannot be loaded.
3	The drive mode restored from internal non-volatile memory is outside the allowed range for the product or the derivative image does not allow the previous drive mode.
4	The drive derivative image has been changed and it has changed the customisation of the drive core menus.
5	The power stage hardware has been changed and changed the customisation of the drive core menus.
6	Reserved
7	Reserved
8	The control board hardware has been change and changed the customisation of the drive core menus.
9	The checksum on the non-parameter area of the EEPROM has failed.

The drive holds two banks of user save parameters and two banks of power down save parameters in non-volatile memory. If the last bank of either set of parameters that was saved is corrupted a *User Save* or *Power Down Save* trip is produced. If one of these trips occurs the parameters values that were last saved successfully are used. It can take some time to save parameters when requested by the user and if the power is removed from the drive during this process it is possible to corrupt the data in the non-volatile memory.

If both banks of user save parameters or both banks of power down save parameters are corrupted or one of the other conditions given in the table above occurs *EEPROM Fail*.xxx trip is produced. If this trip occurs it is not possible to use the data that has been saved previously, and so the drive will be loaded with default parameters. The trip can only be reset if *Parameter mm.000* (mm.000) is set to 10, 11, 1233 or 1244 or if *Load Defaults* (11.043) is set to a non-zero value.

Trip	*External Trip*
Value	6
Short description	External trip generated by the application

External trip is initiated as shown in the table below.

Sub-trip	Reason
3	*External Trip* (10.032) = 1

Recommended actions:

- Check the value of *External Trip* (10.032).
- Select "Destinations" (or enter 12001) in Pr *mm.000* and check for a parameter controlling *External Trip* (10.032).
- Ensure *External Trip* (10.032) or *User Trip* (10.038) (=6) is not being used by serial comms.

Trip	***Fan fail***
Value	173
Short description	Cooling fan failure

Fan failure

Recommended actions:

- Check that the fan is fitted and connected correctly.
- Contact the supplier of the drive to replace the fan.

Trip	***File changed***
Value	247
Short description	Configuration data within the drive has changed

Drive configuration file has changed in the power stage processor and so a power cycle is required.

Recommended actions:

- Power cycle the drive

Trip	***FW incompatible***
Value	237
Short description	The power stage and control board firmware versions are not compatible

This trip is generated if the ww.xx parts of the User firmware version *Software Version* (11.029) do not match the ww.xx part of the power stage firmware *Power Software Version* (11.035).

Trip	***Hot Rect/Brake***
Value	250
Short description	

The input rectifier or braking IGBT is too hot.

Trip	***I cal. range***
Value	231
Short description	Current feedback calibration range error

Current calibration range error.

Recommended actions:

- Hardware fault - contact the supplier of the drive.

Trip	***I/O Overload***
Value	26
Short description	Overload on 24V or digital outputs

This trip indicates that the total current drawn from the AI adaptor 24V or from the digital output has exceeded the limit.

Sub-trip	Reason
1	Digital output or 24V supply load on control terminals is too high.
2	AI adptor 24V load is too high

Recommended actions:

- Check total loads on digital outputs and 24V.
- Check control wiring is correct.
- Check output wiring is undamaged

Trip	***Keypad Mode***
Value	34
Short description	Keypad communication failure

If keypad reference mode is enabled (*Reference Selected Indicator* (01.049) = 4 or 6) (i.e. *Reference Selector* (01.014) is set to 4 or 6 if motor map 1 is selected, or *M2 Reference Selector* (21.003) is set to 4 or 6 if motor map 2 is selected) and the keypad removed, then this trip is initiated.

Recommended actions:

- Re-install keypad and reset.
- Change *Reference Selector* (01.014) to select the reference from another source.

Trip	***LF Power Comms***
Value	90
Short description	Communication link failure in the power stage (size 5 and above)

This trip is initiated if there is communications loss between processors in the power stage on sizes 5 and above. The reason for the trip can be identified by the sub-trip number.

Sub-trip	Reason
1	Comms loss with the auxilairy power processor
1010	Comms loss with rectifier module

Recommended actions:

- Hardware fault - contact the supplier of the drive.

Trip	*Motor Too Hot*
Value	20
Short description	Motor over temperature

This trip indicates a motor thermal overload based on the *Motor Rated Current* (05.007) and *Motor Thermal Time Constant 1* (04.015). *Motor Protection Accumulator* (04.019) displays the motor temperature as a percentage of the maximum value. The drive will trip on *Motor Too Hot* when *Motor Protection Accumulator* (04.019) gets to 100%.

Recommended actions:

- Ensure the load is not jammed / sticking.
- Check the load on the motor has not changed.
- Tune the *Motor Rated Speed* (05.008) (RFC-A mode only).
- Ensure the motor rated current is correct.

Trip	*No power board*
Value	236
Short description	No power stage detected by the Control board

This trip is generated if the control board cannot establish a communication link with the power stage within 5 seconds of powering up.

Trip	*None*
Value	0
Short description	No trip recorded

No trip. Trip log has a value of zero because there has been no trip since the drive left the factory or the trip log has been cleared by setting parameter 10.038 to 255.

Trip	*OHt Control*
Value	219
Short description	Control board over temperature

This trip indicates that a control stage over-temperature has been detected if *Cooling Fan control* (06.045) = 0.

This trip causes the option module to go to standby and *Potential Drive Damage Conditions* (10.106) bit 1 to be set.

Recommended actions:

- Increase ventilation by setting *Cooling Fan control* (06.045) > 0.

Trip	*OHt dc bus*
Value	27
Short description	Overload on DC bus components

This trip indicates a DC bus component over temperature based on a firmware thermal model. The drive includes a thermal protection system to protect the DC bus components within the drive. This includes the effects of the output current and DC bus ripple. The estimated temperature is displayed as a percentage of the trip level in *Percentage Of d.c. Link Thermal Trip Level* (07.035). If this parameter reaches 100% then an *OHt dc bus* trip is initiated. The drive will attempt to stop the motor before tripping. If the motor does not stop in 10s then the drive will trip.

Source	xx	y	zz
Control system	00	2	00: DC link thermal model gives *OHt dc bus* with sub-trip 0.

Recommended actions:

- Check the AC supply voltage balance and levels
- Check DC bus ripple level
- Reduce duty cycle
- Reduce motor load
- Check the output current stability. If unstable:
  - Check the motor map settings with motor nameplate (*Motor Rated Frequency* (05.006) , *Motor Rated Current* (05.007) , *Motor Rated Speed* (05.008) , *Motor Rated Voltage* (05.009) , *Motor Rated Power Factor* (05.010) , and *Number Of Motor Poles* (05.011)).
  - Disconnect the load and complete a rotating auto-tune (*Auto-tune* (05.012) = 2).
  - Disable slip compensation (*Slip Compensation Level* (05.027) = 0.0%).
  - Disable dynamic V to F operation (*Flux Optimisation Select, Dynamic V To F Select* (05.013) = 0).
  - Select fixed boost (*Open-loop Voltage Mode* (05.014) = Fixed (2)).
  - Select high stability space vector modulation (*High Stability Space Vector Modulation* (05.019) = 1).

Trip	*OHt Inverter*
Value	21
Short description	Inverter IGBT junction over temperature

This trip indicates that an IGBT junction over-temperature has been detected based on a firmware thermal model.

Recommended actions:

- Check enclosure / drive fans are still functioning correctly.
- Force the heatsink fans to run at maximum speed.
- Check enclosure ventilation paths.
- Check enclosure door filters.
- Increase ventilation.
- Reduce the selected drive switching frequency.
- Ensure *Auto-switching Frequency Change Disable* (05.035) is set to Off.
- Reduce duty cycle.
- Increase acceleration / deceleration rate parameter values.
- Reduce motor load.
- Check DC bus ripple.
- Ensure all three input phases are present and balanced.
- Check the derating tables and confirm the drive is correctly sized for the application.
- Use a drive with larger current / power rating.

Trip	***OHt Power***
Value	22
Short description	Power stage over temperature

This trip indicates that a power stage over-temperature has been detected. From the sub-trip "xxyzz", the thermistor location is identified by "zz".

Source	**xx**	**y**	**zz**
Power system	01	0	zz: Thermistor location defined by zz in the power system gives *OHt Power* trip with sub-trip xx0zz.

Recommended actions:

- Check enclosure / drive fans are still functioning correctly.
- Force the heatsink fans to run at maximum speed.
- Check enclosure ventilation paths.
- Check enclosure door filters.
- Increase ventilation.
- Reduce the selected drive switching frequency.
- Ensure *Auto-switching Frequency Change Disable* (05.035) is set to Off.
- Reduce duty cycle.
- Increase acceleration / deceleration rate parameter values.
- Reduce motor load.
- Check DC bus ripple.
- Ensure all three input phases are present and balanced.
- Check the derating tables and confirm the drive is correctly sized for the application.
- Use a drive with larger current / power rating.

Trip	***OI ac***
Value	3
Short description	Over current at the motor terminals

This trip indicates that the instantaneous drive output current has exceeded the over current threshold.

The over current threshold is the maximum current the drive can measure and is defined by *Full Scale Current Kc* (11.061)

This trip cannot be reset until 10 s after the trip was initiated.

Recommended actions:

- Increase acceleration/deceleration rate parameter values
- If seen during auto-tune reduce the voltage boost
- Check for short circuit on the output cabling
- Check integrity of the motor insulation using an insulation tester
- Check the motor cable length is within limits for the frame size.
- Reduce the values in the current loop gain parameters - (*Torque and Current control* (04))

Trip	***OI Brake***
Value	4
Short description	Over current in the brake IGBT

This trip indicates that an over-current has been detected in the braking IGBT.

This trip cannot be reset until 10 s after the trip was initiated.

Recommended actions:

- Check brake resistor wiring.
- Check braking resistor value is greater than or equal to the minimum resistance value.
- Check braking resistor insulation.

Trip	***OI Snubber***
Value	92
Short description	Over current in snubber components (size 5 and above)

This trip indicates that an over-current condition has been detected in the rectifier snubbing circuit on sizes 5 and above. The exact cause of the trip can be identified by the sub-trip number.

Sub-trip	**Reason**
1010	Rectifier snubber over-current trip detected.

Recommended actions:

- Ensure the internal EMC filter is installed.
- Ensure the motor cable length does not exceed the maximum for selected switching frequency.
- Check for supply voltage imbalance.
- Check for supply disturbance such as notching from a DC drive.
- Check the motor and motor cable insulation with an insulation tester.
- Fit an output line reactor or sinusoidal filter

Trip	***Out Phase Loss***
Value	98
Short description	One of the motor windings is not drawing current

Output phase loss detected. A test can be made for output phase loss when the drive is enabled or the output phase loss condition can be detected while the drive is running as defined by *Output Phase Loss Detection Enable* (06.059).

Sub-trip	**Reason**
1	Phase U is not connected when drive is enabled
2	Phase V is not connected when drive is enabled
3	Phase W is not connected when drive is enabled
4	The drive output frequency is above 4Hz and a phase is disconnected for the time specified by *Output Phase Loss Detection Time* (06.058)

Recommended actions:

- Check motor and drive connections.
- To disable the trip set *Output Phase Loss Detection Enable* (06.059) to Off.

Trip	***Output phase U***
Value	228
Short description	Over current on U phase

On enabling of the drive it switches the negative DC bus to each motor terminal in turn to detect an earth fault. If current is detected in any of the motor windings the drive will trip *OI.E1*, *OI.E2* or *OI.E3* depending on which terminal the fault is detected (U, V, or W respectively).

Recommended actions:

- Check motor and connection to motor

Trip	***Output phase V***
Value	229
Short description	Over current on V phase

See *Output phase U*.

Trip	***Output phase W***
Value	230
Short description	Over current on W phase

See *Output phase U*.

Trip	***Over Speed***
Value	7
Short description	Motor over speed

In open loop mode, if *Post Ramp Reference* (02.001) exceeds the threshold set in *Over Frequency Threshold* (03.008) in either direction an Over Speed trip is produced. In RFC-A mode, if *Estimated Frequency* (03.002) exceeds the threshols set in *Over Frequency Threshold* (03.008) either direction an Over Speed trip is produced.

If *Over Frequency Threshold* (03.008) is set to 0.00 the threshold is then equal to 1.2 x VM_SPEED_FREQ_REF[MAX].

Recommended actions:

• Check that the motor is not being driven by another part of the system.

• Reduce the Frequency Controller Proportional Gain *Frequency Controller Proportional Gain Kp1* (03.010) to reduce the frequency overshoot (RFC-A mode only).

Trip	***Over Volts***
Value	2
Short description	DC Bus voltage is high

This trip indicates the the DC bus voltage has exceeded a maximum value instantaneously or VM_DC_VOLTAGE_SET[MAX] for 15s. The trip threshold varies depending on voltage rating of the drive as shown below.

Voltage rating	**Threshold**
200	415
400	830
575 (size 5 and above)	990
690V (size 7 and above)	1192

The exact cause of the trip can be identified by the sub-trip number.

Sub-trip	Reason
0	Instantaneous trip when the d.c. link voltage exceeds the theshold in the table above
1	Reserved
2	Time delayed trip indicating that the d.c. link voltage is above VM_DC_VOLTAGE_SET[MAX].

Recommended actions:

- Increase deceleration ramp rate parameter values.
- Decrease the braking resistor value (staying above the minimum value).
- Check nominal AC supply level.
- Check for supply disturbances which could cause the DC bus level to rise.
- Check motor insulation using an insulation tester.

Trip	*Phase Loss*
Value	32
Short description	Input Phase Loss

This trip indicates that the drive has detected an input phase loss or large supply imbalance. The drive will attempt to stop the motor before the trip is initiated. If the motor cannot be stopped in 10 seconds the trip occurs. This trip works by monitoring the ripple voltage on the DC bus of the drive, if the DC buss ripple exceeds the threshold, the drive will trip on *Phase Loss*. Potential causes of the DC bus ripple are input phase loss, large supply impedance and severe output current instability.

Source	xx	y	zz
Control system	00	0	00: Phase loss detected based on control system feedback. The drive attempts to stop the drive before tripping unless bit 2 of *Action On Trip Detection* (10.037) is set to one.
Power system	01	0	10: Phase loss has been detected by the rectifier module.

Input phase loss detection can be disabled when the drive is required to operate from the DC supply or from a single phase supply in *Input Phase Loss Detection Mode* (06.047).

Recommended actions:

- Check the AC supply voltage balance and level at full load.
- Check the DC bus ripple level with an isolated oscilloscope.
- Check the output current stability.
- Reduce the duty cycle.
- Reduce the motor load.
- Disable the phase loss detection by setting *Input Phase Loss Detection Mode* (06.047) to Disabled.

Trip	*Power Board HF*
Value	235
Short description	Harware Fault in the power stage processor detected

This trip indicates that a Hardware fault has occurred in the power stage processor. The exact reason for the trip is identified by the sub-trip number.

Sub-Trip	Reason
1	CPU hardware fault during exception processing
2	CPU memory management fault is an exception that occurs because of a memory protection related fault
3	CPU has detected a Bus Fault. A Bus Fault is an exception that occurs because of a memory related fault for an instruction or data memory transaction. This might be from an error detected on a bus in the memory system.
4	CPU has detected a usage fault: A Usage Fault is an exception that occurs because of a fault related to instruction execution. This includes: • an undefined instruction • an illegal unaligned access • invalid state on instruction execution • an error on exception return. The following can cause a Usage Fault when the core is configured to report them: • an unaligned address on word and half word memory access • division by zero.
7	Watchdog failure
8	CPU Interrupt crash.
19	Level 1 timeout
20	Level 2 timeout
21	Level 3 timeout
22	Level 4 timeout

Trip	*Power Boot Mode*
Value	245
Short description	Power stage processor is in its boot loader

The power stage processor is in its bootloader

Recommended actions:

- Send power stage firmware file to reprogram the power board and power cycle drive.

Trip	*Power Comms*
Value	93
Short description	Communication link failure between Control board and power stage

Communication between the control board processor and the power stage processor has been lost. The exact cause of the trip can be identified by the sub-trip number.

Sub-trip number	Reason
1	PLL operating region out of lock
2	Power stage not receiving data
3	Control board not receiving data
4	Communication CRC error

Recommended actions:

- Hardware fault - contact the supplier of the drive.

Trip	*Power Data*
Value	220
Short description	Configuration data failure

Data relevant to the rating of the drive is stored in the power stage processor flash memory. A copy of this data is also stored in the control board board processor and this is transferred across at power up if the data in the control board and power stage does not match.. There ar a few sub-trips associated with power data transfer:

Sub-trip	Reason
0	An error occured when writing to the data in the Power stage Flash (during factory upload of data)
1	A file error has been detected in the Power stage when data is being written to it (in the factory),or being uploaded from it by the control board processor.
2	There is no table present in the power stage, or there is an error in the data table, or the control board is being powered from the 24V backup supply and it does not have a valid table present (during 24V backup operation the control card cannot communicate with the power stage to update the data dable).
3	The power system data table is bigger than the space available in the control pod to store it.
4	Reserved
5	Table CRC error.
6	The version number of the generator software that produced the table is too low, i.e. a table from a newer generator is required that includes features that have been added to the table that may not be present.
7	The control board failed to upload the data from the power stage or write it to it's flash memory.

On size 5 and above the above sub-trips have 1000 added to them. i.e. sub-trip 1 will be displayed as 1001.

Recommended actions:

- Hardware fault - contact the supplier of the drive.

Trip	***Power Down Save***
Value	37
Short description	Power down saved parameters have been corrupted

This trip indicates that an error has been detected in the power down save parameters stored in non-volatile memory.

Recommended actions:

- Perform a 1001 save in Pr *mm.000* to ensure that the trip doesn't occur the next time the drive is powered up.

Trip	***PSU***
Value	5
Short description	Internal Power Supply fault

This trip indicates that one or more internal power supply rails are outside limits or overloaded.

Source	xx	y	zz
Power system	01	0	10: Internal power supply overload

Recommended actions:

- Hardware fault within the drive - return the drive to the supplier.

Trip	***Reserved***
Value	1
Short description	

Reserved trip number.

Trip	***Reserved***
Value	9
Short description	

Reserved trip number.

Trip	***Reserved***
Value	10
Short description	

Reserved trip number.

Trip	***Reserved***
Value	12
Short description	

Reserved trip number.

Trip	*Reserved*
Value	14
Short description	

Reserved trip number.

Trip	*Reserved*
Value	15
Short description	

Reserved trip number.

Trip	*Reserved*
Value	16
Short description	

Reserved trip number.

Trip	*Reserved*
Value	17
Short description	

Reserved trip number.

Trip	*Reserved*
Value	23
Short description	

Reserved trip number.

Trip	*Reserved*
Value	38
Short description	

Reserved trip number.

Trip	*Reserved*
Value	91
Short description	

Reserved trip number.

Trip	*Reserved*
Value	94
Short description	

Reserved trip number.

Trip	*Reserved*
Value	95
Short description	

Reserved trip number.

Trip	*Reserved*
Value	99
Short description	

Reserved trip number.

Trip	*Reserved*
Value	101
Short description	

Reserved trip number.

Trip	*Reserved*
Value	102
Short description	

Reserved trip number.

Trip	*Reserved*
Value	103
Short description	

Reserved trip number.

Trip	*Reserved*
Value	104
Short description	

Reserved trip number.

Trip	*Reserved*
Value	105
Short description	

Reserved trip number.

Trip	*Reserved*
Value	106
Short description	

Reserved trip number.

Trip	*Reserved*
Value	107
Short description	

Reserved trip number.

Trip	*Reserved*
Value	108
Short description	

Reserved trip number.

Trip	*Reserved*
Value	109
Short description	

Reserved trip number.

Trip	*Reserved*
Value	111
Short description	

Reserved trip number.

Trip	*Reserved*
Value	168
Short description	

Reserved trip number.

Trip	*Reserved*
Value	169
Short description	

Reserved trip number.

Trip	*Reserved*
Value	170
Short description	

Reserved trip number.

Trip	*Reserved*
Value	171
Short description	

Reserved trip number.

Trip	*Reserved*
Value	172
Short description	

Reserved trip number.

Trip	*Reserved*
Value	174
Short description	

Reserved trip number.

Trip	*Reserved*
Value	176
Short description	

Reserved trip number.

Trip	*Reserved*
Value	177
Short description	

Reserved trip number.

Trip	*Reserved*
Value	192
Short description	

Reserved trip number.

Trip	*Reserved*
Value	193
Short description	

Reserved trip number.

Trip	*Reserved*
Value	194
Short description	

Reserved trip number.

Trip	*Reserved*
Value	195
Short description	

Reserved trip number.

Trip	*Reserved*
Value	196
Short description	

Reserved trip number.

Trip	*Reserved*
Value	197
Short description	

Reserved trip number.

Trip	*Reserved*
Value	198
Short description	

Reserved trip number.

Trip	*Reserved*
Value	205
Short description	

Reserved trip number.

Trip	*Reserved*
Value	206
Short description	

Reserved trip number.

Trip	*Reserved*
Value	207
Short description	

Reserved trip number.

Trip	*Reserved*
Value	208
Short description	

Reserved trip number.

Trip	*Reserved*
Value	209
Short description	

Reserved trip number.

Trip	*Reserved*
Value	210
Short description	

Reserved trip number.

Trip	*Reserved*
Value	211
Short description	

Reserved trip number.

Trip	*Reserved*
Value	212
Short description	

Reserved trip number.

Trip	*Reserved*
Value	213
Short description	

Reserved trip number.

Trip	*Reserved*
Value	214
Short description	

Reserved trip number.

Trip	*Reserved*
Value	215
Short description	

Reserved trip number.

Trip	*Reserved*
Value	216
Short description	

Reserved trip number.

Trip	*Reserved*
Value	217
Short description	

Reserved trip number.

Trip	*Reserved*
Value	222
Short description	

Reserved trip number.

Trip	*Reserved*
Value	223
Short description	

Reserved trip number.

Trip	*Reserved*
Value	224
Short description	

Reserved trip number.

Trip	*Reserved*
Value	225
Short description	

Reserved trip number.

Trip	*Reserved*
Value	233
Short description	

Reserved trip number.

Trip	*Reserved*
Value	238
Short description	

Reserved trip number.

Trip	*Reserved*
Value	239
Short description	

Reserved trip number.

Trip	*Reserved*
Value	240
Short description	

Reserved trip number.

Trip	*Reserved*
Value	241
Short description	

Reserved trip number.

Trip	*Reserved*
Value	242
Short description	

Reserved trip number.

Trip	*Reserved*
Value	243
Short description	

Reserved trip number.

Trip	*Reserved*
Value	244
Short description	

Reserved trip number.

Trip	*Reserved*
Value	251
Short description	

Reserved trip number.

Trip	*Reserved*
Value	252
Short description	

Reserved trip number.

Trip	*Reserved*
Value	253
Short description	

Reserved trip number.

Trip	*Reserved*
Value	254
Short description	

Reserved trip number.

Trip	*Reset*
Value	100
Short description	Not valid

This is not a valid trip number as this value is used in *User Trip* (10.038) to reset the drive.

Trip	*Reset Logs*
Value	255
Short description	Not valid - value used to reset the trip log

This is not a valid trip number as this value is used in *User Trip* (10.038) to reset the trip logs.

Trip	*Resistance*
Value	33
Short description	Resistance measurement failure

During auto-tune an attempt is made to measure the resistance of the motor connected to the drive. The drive will trip with one of the following sub-trip codes if a problem is encountered during the measurement.

Sub-trip	Reason
0	Stator resistance is > (V_{FS} / v2) / *Full Scale Current Kc* (11.061), where V_{FS} is the full scale d.c. link voltage; or the result is = 100ohms.
1	Reserved
2	The measured Transient Inductance is > 500mH or the measured Stator inductance is > 5000mH.
3	A resistance value entered by the user is > (V_{FS} / v2) / *Full Scale Current Kc* (11.061), where V_{FS} is the full scale d.c. link voltage. Clear this trip by setting *Stator Resistance* (05.017) to a value that is in range and reseting the drive.
4	The measured stator resistance is not > than the sub-trip 0 checks but is outside the firmware usable range for this drive size.

Recommended actions:

- Ensure the stator resistance of the motor falls within the range of the drive model. The most likely cause of this trip is trying to measure a motor much smaller than the drive rating. Ratio's of drive size to motor size of > 15:1 are likely to lead to problems.
- Check that a value has not been entered in the Stator Resistance for the presently selected motor map that exceeds the allowed range.
- Check the motor cable / connections.
- Check the integrity of the motor stator winding using an insulation tester.
- Check the motor phase to phase resistance at the drive terminals.
- Check the motor phase to phase resistance at the motor terminals.
- Select fixed boost mode (*Open-loop Voltage Mode* (05.014) = Fixed) and verify the output current waveforms with an oscilloscope.
- Replace the motor.

Trip	*Slot1 Different*
Value	204
Short description	Option module has changed

If the option module fitted in option slot 1 is different to the option module present at the last power-down then this trip is produced. The sub-trip number gives the identification code of the module that was originally fitted. Drive user parameters must be saved to prevent this trip on the next power-up if the module has changed. If the menus have been changed, but not the module, the trip will not occur on the next power-up. The sub-trip number gives the following indications of the reason for the trip.

Sub-trip	Reason
1	No module was fitted previously
2	A module with the same identifier is fitted, but the set-up menu has been changed, and so default parameters have been loaded for this menu.
3	A module with the same identifier is fitted, but the applications menu for this option has been changed, and so default parameters have been loaded for this menu.
4	A module with the same identifier is fitted, but the set-up and applications menu have been changed, and so default parameters have been loaded for these menus.
>99	Shows the identifier of the module previously fitted.

Recommended actions:

- Turn off the power, ensure the correct option module is installed and re-apply the power.
- Confirm that the currently installed option module is correct, ensure option module parameters are set correctly and perform a user save in Pr *mm.000*.

Trip	*Slot1 Error*
Value	202
Short description	Error generated by the option module

The option module in option slot 1 has indicated an error. The option module can give the reason for the error and this is shown in the sub-trip number. As default the sub-trip number is shown as a number on the display, however, it is possible for the option module to supply sub-trip number strings which will be displayed instead of the number if available.

Recommended actions:

- See relevant *Option Module User Guide* for details of the trip.

Trip	*Slot1 HF*
Value	200
Short description	Error in communication with an option module

This trip indicates that there is a fault with the option module in option slot 1 that means that this module cannot operate. The possible causes of the trip are given by the sub-trip value.

Sub-trip	Reason
1	The module category cannot be identified
2	All the required customisable menu table information has not been supplied or the tables supplied are corrupt
3	There is insufficient memory available to allocate the comms buffers for this module.
4	The module has not indicated that it is running correctly during drive power-up
5	The module has been removed after power-up or it has ceased to indicate to the drive processor that it is still active.
6	The module has not indicated that it has stopped accessing drive parameters during a drive mode change
7	The module has failed to acknowledge that a request has been made to reset the drive processor.
8	The drive failed to read the menu table from the module correctly during drive power-up.
9	The drive failed to upload menu tables from the module and timed-out (5s).
10	Menu table CRC invalid.

Recommended actions:

- Ensure the option module is installed correctly.
- Replace the option module.
- Replace the drive.

Trip	*Slot1 Not Fitted*
Value	203
Short description	Option module no longer fitted

Any option module fitted in the drive is identified at power-up and the option fitted is stored by the drive in its non-volatile memory. If an option module was fitted in slot 1 at power-down, but that option module has subsequently been removed before power up then this trip is produced. The sub-trip number gives the identification code of the option module that has been removed. Drive user parameters must be saved to prevent this trip on the next power-up.

Recommended actions:

- Ensure the option module is installed correctly.
- Re-install the option module.
- To confirm that the removed option module is no longer required perform a save function in Pr *mm.000.*

Trip	***Slot1 Watchdog***
Value	201
Short description	Option module has not updated the option watchdog

This trip indicates that the option module in option slot 1 has started the option watchdog function and then failed to service this watchdog correctly.

Recommended actions:

- Replace the option module.

Trip	***Soft Start***
Value	226
Short description	Soft start hardware failure

This trip indicates that the soft soft start system has remained active when it should be inactive. For a resistor based soft start this means that the soft start shorting relay has not closed. On 110V drives it also indicates that one of the DC link capacitors has failed.

Sub-trip	**Reason**
1	The soft start system has failed.
2	A DC bus capacitor has failed (110V drives only)

Recommended actions:

- Hardware fault - contact the supplier of the drive.

Trip	***STO error***
Value	234
Short description	No STO harware detected

STO board not fitted.

Recommended actions:

- Hardware fault - contact the supplier of the drive.

Trip	***Stored HF***
Value	221
Short description	Indicates that the drive had a Hardware fault on the last power down

If an HF01 to HF18 trip occurs then a *Stored HF* trip occurs each time the drive is powered up until this trip is reset. The sub-trip code is the number of the original HF trip. The *Stored HF* trip can only be reset by first writing 1299 to Pr *mm.000* and resetting the drive.

Recommended actions:

- Enter 1299 into Pr *mm.000* and press reset to clear the trip.

Trip	***Sub-array RAM***
Value	227
Short description	RAM allocation failure

An option module, derivative image or user program image has requested more parameter RAM than is allowed. The RAM allocation is checked in order of resulting sub-trip numbers, and so the failure with the highest sub-trip number is given. The sub-trip is calculated as (parameter size x 1000) + (parameter type x 100) + sub-array number. Note that if this trip occurs, all menu customisation provided by option modules, the derivative image or the user program image is not used. The tables below show the values corresponding to the parts of the sub-trip number.

Parameter size	**Value**
1 bit	1
8 bit	2
16 bit	3
32 bit	4
64 bit	5

Parameter type	Value
Volatile	0
User save	1
Power-down save	2

Derivatives can customise menus 18 and 20.

Sub-array	Menus	Value
Applications menus	18-20	1
Derivative image	29	2
User program image	30	3
Option slot 1 set-up	15	4
Option slot 1 applications	25	5

e.g. for a 16 bit parameter in an application menu in the User save area the sub-trip would be 16101.

Trip	*Temp Feedback*
Value	218
Short description	Internal temperature monitoring fault

This trip indicates a fault with a thermistor in the Power stage (i.e. open circuit or short circuit).

Sub-trip	Reason
0	Thermistor failure in the main power stage
1010	Thermistor failure in the rectifier module

Recommended actions:

- Hardware fault - contact the supplier of the drive.

Trip	*Th Short Circuit*
Value	25
Short description	Motor thermistor short circuit

This trip indicates that the motor thermistor is short circuited or has a low impedance.

Digital input 5 mode (08.035) is set to 1 and the resistance of the thermistor connected to DI 5 is less than 50ohms.

Recommended actions:

- Check thermistor continuity.
- Replace motor / motor thermistor

Trip	*Thermistor*
Value	24
Short description	Motor thermistor over temperature

This trip indicates that the motor thermistor has indicated a motor over-temperature.

If *Digital input 5 mode* (08.035) is 1 or 2 then a *Thermistor* trip is initiated if the feedback value is higher than *Thermistor Trip Threshold* (07.048).

Recommended actions:

- Check motor temperature.
- Check thermistor continuity.

Trip	*User OI ac*
Value	8
Short description	User defined motor Over current trip

Motor current has exceeded the User defined limit set in *User Over Current Trip Level* (04.041).

Trip	*User Prog Trip*
Value	96
Short description	On board user program trip

This trip can be initiated from within an onboard user program using a function call which defines the sub-trip number.

Recommended actions:

- Check the user program

Trip	*User Program*
Value	249
Short description	User program error

An error has been detected in the onboard user program image. The sub-trip indicated the reason for the trip.

Sub-trip	Reason	Comments
1	Divide by zero	
2	Undefined trip	
3	Attempted fast parameter access set-up with non-existent parameter	
4	Attempted access to non-existent parameter	
5	Attempted write to read-only parameter	
6	Attempted an over-range write	
7	Attempted read from write-only parameter	
30	The image has failed because either its CRC is incorrect, or there are less than 6 bytes in the image or the image header version is less than 5.	Occurs when the drive powers-up or the image is programmed. The image tasks will not run.
31	The image requires more RAM for heap and stack than can be provided by the drive.	As 30.
32	The image requires an OS function call that is higher than the maximum allowed.	As 30.
33	The ID code within the image is not valid	As 30.
34	The user program image has been changed for an image with a different user program number.	As 30.
40	The timed task has not completed in time and has been suspended.	*Onboard User Program: Enable* (11.047) is reset to zero when the trip is initiated. Reduce code in timed task or slow down the task repeat rate (*Onboard User Program: Clock Task Schedule Rate* (11.055)).
41	Undefined function called, i.e. a function in the host system vector table that has not been assigned.	As 40.
52	Customisable menu table CRC check failed	As 30.
53	Customisable menu table changed	Occurs when the drive powers-up or the image is programmed and the table has changed. Defaults are loaded for the user program menu and the trip will keep occurring until drive parameters are saved.
80	*Image is not compatible with the control board	Initiated from within the image code.
81	*Image is not compatible with the control board serial number	As 80.
100	Image has detected and prevented attempted pointer access outside of the IEC task's heap area.	
101	Image has detected and prevented misaligned pointer usage.	
102	Image has detected an array bounds violation and prevented its access.	
103	Image has attempted to convert a data type to or from an unknown data type, has failed and has shut itself down.	

104	Image has attempted to use an unknown user service function.	
200	User program has invoked a “divide” service with a denominator of zero. (Note that this is raised by the downloaded image and has therefore been given a distinct error code despite being the same fundamental problem as sub-trip 1.)	
201	Parameter access is not supported. An attempt to read database other than the host drive.	
202	Parameter does not exist. Database was host drive but the specified parameter does not exist.	
203	Parameter is read-only.	
204	Parameter is write-only.	
205	Unknown parameter error.	
206	Invalid bit present in parameter. The parameter does not contain the specified bit.	
207	Parameter format lookup failed. Failed to get parameter information data.	
208	An over-range write has been attempted.	

The following table gives the differences when compared to the derivative product image.

Sub-trip	Difference
40, 41	*Onboard User Program: Enable* (11.047) is reset to zero when the trip is initiated.
51	Not applicable as core menu customisation not allowed
6x	Not applicable as option module restrictions not allowed
7x	Not applicable as option module restrictions not allowed
100	Image has detected and prevented attempted pointer access outside of the IEC task’s heap area.
101	Image has detected and prevented misaligned pointer usage.
102	Image has detected an array bounds violation and prevented its access.
103	Image has attempted to convert a data type to or from an unknown data type, has failed and has shut itself down.
104	Image has attempted to use an unknown user service function.
200	User program has invoked a “divide” service with a denominator of zero. (Note that this is raised by the downloaded image and has therefore been given a distinct error code despite being the same fundamental problem as sub-trip 1.)

Trip	*User Save*
Value	36
Short description	User saved parameter set has been corrupted

This trip indicates that an error has been detected in the user save parameters saved in non-volatile memory. For example, following a user save command, if the power to the drive was removed when the user parameters were being saved.

Recommended actions:

- Perform a user save in Pr *mm.000* to ensure that the trip doesn't occur the next time the drive is powered up.
- Ensure that the drive has enough time to complete the save before removing the power to the drive.

Trip	*User Trip 40*
Value	40
Short description	

This trip is not used by the drive and can be used for a user trip.

Trip	*User Trip 41*
Value	41
Short description	

This trip is not used by the drive and can be used for a user trip.

Trip	*User Trip 42*
Value	42
Short description	

This trip is not used by the drive and can be used for a user trip.

Trip	*User Trip 43*
Value	43
Short description	

This trip is not used by the drive and can be used for a user trip.

Trip	*User Trip 44*
Value	44
Short description	

This trip is not used by the drive and can be used for a user trip.

Trip	*User Trip 45*
Value	45
Short description	

This trip is not used by the drive and can be used for a user trip.

Trip	*User Trip 46*
Value	46
Short description	

This trip is not used by the drive and can be used for a user trip.

Trip	*User Trip 47*
Value	47
Short description	

This trip is not used by the drive and can be used for a user trip.

Trip	*User Trip 48*
Value	48
Short description	

This trip is not used by the drive and can be used for a user trip.

Trip	*User Trip 49*
Value	49
Short description	

This trip is not used by the drive and can be used for a user trip.

Trip	*User Trip 50*
Value	50
Short description	

This trip is not used by the drive and can be used for a user trip.

Trip	*User Trip 51*
Value	51
Short description	

This trip is not used by the drive and can be used for a user trip.

Trip	*User Trip 52*
Value	52
Short description	

This trip is not used by the drive and can be used for a user trip.

Trip	*User Trip 53*
Value	53
Short description	

This trip is not used by the drive and can be used for a user trip.

Trip	*User Trip 54*
Value	54
Short description	

This trip is not used by the drive and can be used for a user trip.

Trip	*User Trip 55*
Value	55
Short description	

This trip is not used by the drive and can be used for a user trip.

Trip	*User Trip 56*
Value	56
Short description	

This trip is not used by the drive and can be used for a user trip.

Trip	*User Trip 57*
Value	57
Short description	

This trip is not used by the drive and can be used for a user trip.

Trip	*User Trip 58*
Value	58
Short description	

This trip is not used by the drive and can be used for a user trip.

Trip	*User Trip 59*
Value	59
Short description	

This trip is not used by the drive and can be used for a user trip.

Trip	*User Trip 60*
Value	60
Short description	

This trip is not used by the drive and can be used for a user trip.

Trip	*User Trip 61*
Value	61
Short description	

This trip is not used by the drive and can be used for a user trip.

Trip	*User Trip 62*
Value	62
Short description	

This trip is not used by the drive and can be used for a user trip.

Trip	*User Trip 63*
Value	63
Short description	

This trip is not used by the drive and can be used for a user trip.

Trip	*User Trip 64*
Value	64
Short description	

This trip is not used by the drive and can be used for a user trip.

Trip	*User Trip 65*
Value	65
Short description	

This trip is not used by the drive and can be used for a user trip.

Trip	*User Trip 66*
Value	66
Short description	

This trip is not used by the drive and can be used for a user trip.

Trip	*User Trip 67*
Value	67
Short description	

This trip is not used by the drive and can be used for a user trip.

Trip	*User Trip 68*
Value	68
Short description	

This trip is not used by the drive and can be used for a user trip.

Trip	*User Trip 69*
Value	69
Short description	

This trip is not used by the drive and can be used for a user trip.

Trip	*User Trip 70*
Value	70
Short description	

This trip is not used by the drive and can be used for a user trip.

Trip	*User Trip 71*
Value	71
Short description	

This trip is not used by the drive and can be used for a user trip.

Trip	*User Trip 72*
Value	72
Short description	

This trip is not used by the drive and can be used for a user trip.

Trip	*User Trip 73*
Value	73
Short description	

This trip is not used by the drive and can be used for a user trip.

Trip	*User Trip 74*
Value	74
Short description	

This trip is not used by the drive and can be used for a user trip.

Trip	*User Trip 75*
Value	75
Short description	

This trip is not used by the drive and can be used for a user trip.

Trip	*User Trip 76*
Value	76
Short description	

This trip is not used by the drive and can be used for a user trip.

Trip	*User Trip 77*
Value	77
Short description	

This trip is not used by the drive and can be used for a user trip.

Trip	*User Trip 78*
Value	78
Short description	

This trip is not used by the drive and can be used for a user trip.

Trip	*User Trip 79*
Value	79
Short description	

This trip is not used by the drive and can be used for a user trip.

Trip	*User Trip 80*
Value	80
Short description	

This trip is not used by the drive and can be used for a user trip.

Trip	*User Trip 81*
Value	81
Short description	

This trip is not used by the drive and can be used for a user trip.

Trip	*User Trip 82*
Value	82
Short description	

This trip is not used by the drive and can be used for a user trip.

Trip	*User Trip 83*
Value	83
Short description	

This trip is not used by the drive and can be used for a user trip.

Trip	*User Trip 84*
Value	84
Short description	

This trip is not used by the drive and can be used for a user trip.

Trip	*User Trip 85*
Value	85
Short description	

This trip is not used by the drive and can be used for a user trip.

Trip	*User Trip 86*
Value	86
Short description	

This trip is not used by the drive and can be used for a user trip.

Trip	*User Trip 87*
Value	87
Short description	

This trip is not used by the drive and can be used for a user trip.

Trip	*User Trip 88*
Value	88
Short description	

This trip is not used by the drive and can be used for a user trip.

Trip	*User Trip 89*
Value	89
Short description	

This trip is not used by the drive and can be used for a user trip.

Trip	*User Trip 112*
Value	112
Short description	

This trip is not used by the drive and can be used for a user trip.

Trip	*User Trip 113*
Value	113
Short description	

This trip is not used by the drive and can be used for a user trip.

Trip	*User Trip 114*
Value	114
Short description	

This trip is not used by the drive and can be used for a user trip.

Trip	*User Trip 115*
Value	115
Short description	

This trip is not used by the drive and can be used for a user trip.

Trip	*User Trip 116*
Value	116
Short description	

This trip is not used by the drive and can be used for a user trip.

Trip	*User Trip 117*
Value	117
Short description	

This trip is not used by the drive and can be used for a user trip.

Trip	*User Trip 118*
Value	118
Short description	

This trip is not used by the drive and can be used for a user trip.

Trip	*User Trip 119*
Value	119
Short description	

This trip is not used by the drive and can be used for a user trip.

Trip	*User Trip 120*
Value	120
Short description	

This trip is not used by the drive and can be used for a user trip.

Trip	*User Trip 121*
Value	121
Short description	

This trip is not used by the drive and can be used for a user trip.

Trip	*User Trip 122*
Value	122
Short description	

This trip is not used by the drive and can be used for a user trip.

Trip	*User Trip 123*
Value	123
Short description	

This trip is not used by the drive and can be used for a user trip.

Trip	*User Trip 124*
Value	124
Short description	

This trip is not used by the drive and can be used for a user trip.

Trip	*User Trip 125*
Value	125
Short description	

This trip is not used by the drive and can be used for a user trip.

Trip	*User Trip 126*
Value	126
Short description	

This trip is not used by the drive and can be used for a user trip.

Trip	*User Trip 127*
Value	127
Short description	

This trip is not used by the drive and can be used for a user trip.

Trip	*User Trip 128*
Value	128
Short description	

This trip is not used by the drive and can be used for a user trip.

Trip	*User Trip 129*
Value	129
Short description	

This trip is not used by the drive and can be used for a user trip.

Trip	*User Trip 130*
Value	130
Short description	

This trip is not used by the drive and can be used for a user trip.

Trip	*User Trip 131*
Value	131
Short description	

This trip is not used by the drive and can be used for a user trip.

Trip	*User Trip 132*
Value	132
Short description	

This trip is not used by the drive and can be used for a user trip.

Trip	*User Trip 133*
Value	133
Short description	

This trip is not used by the drive and can be used for a user trip.

Trip	*User Trip 134*
Value	134
Short description	

This trip is not used by the drive and can be used for a user trip.

Trip	*User Trip 135*
Value	135
Short description	

This trip is not used by the drive and can be used for a user trip.

Trip	*User Trip 136*
Value	136
Short description	

This trip is not used by the drive and can be used for a user trip.

Trip	*User Trip 137*
Value	137
Short description	

This trip is not used by the drive and can be used for a user trip.

Trip	*User Trip 138*
Value	138
Short description	

This trip is not used by the drive and can be used for a user trip.

Trip	*User Trip 139*
Value	139
Short description	

This trip is not used by the drive and can be used for a user trip.

Trip	*User Trip 140*
Value	140
Short description	

This trip is not used by the drive and can be used for a user trip.

Trip	*User Trip 141*
Value	141
Short description	

This trip is not used by the drive and can be used for a user trip.

Trip	*User Trip 142*
Value	142
Short description	

This trip is not used by the drive and can be used for a user trip.

Trip	*User Trip 143*
Value	143
Short description	

This trip is not used by the drive and can be used for a user trip.

Trip	*User Trip 144*
Value	144
Short description	

This trip is not used by the drive and can be used for a user trip.

Trip	*User Trip 145*
Value	145
Short description	

This trip is not used by the drive and can be used for a user trip.

Trip	*User Trip 146*
Value	146
Short description	

This trip is not used by the drive and can be used for a user trip.

Trip	*User Trip 147*
Value	147
Short description	

This trip is not used by the drive and can be used for a user trip.

Trip	*User Trip 148*
Value	148
Short description	

This trip is not used by the drive and can be used for a user trip.

Trip	*User Trip 149*
Value	149
Short description	

This trip is not used by the drive and can be used for a user trip.

Trip	*User Trip 150*
Value	150
Short description	

This trip is not used by the drive and can be used for a user trip.

Trip	*User Trip 151*
Value	151
Short description	

This trip is not used by the drive and can be used for a user trip.

Trip	*User Trip 152*
Value	152
Short description	

This trip is not used by the drive and can be used for a user trip.

Trip	*User Trip 153*
Value	153
Short description	

This trip is not used by the drive and can be used for a user trip.

Trip	*User Trip 154*
Value	154
Short description	

This trip is not used by the drive and can be used for a user trip.

Trip	*User Trip 155*
Value	155
Short description	

This trip is not used by the drive and can be used for a user trip.

Trip	*User Trip 156*
Value	156
Short description	

This trip is not used by the drive and can be used for a user trip.

Trip	*User Trip 157*
Value	157
Short description	

This trip is not used by the drive and can be used for a user trip.

Trip	*User Trip 158*
Value	158
Short description	

This trip is not used by the drive and can be used for a user trip.

Trip	*User Trip 159*
Value	159
Short description	

This trip is not used by the drive and can be used for a user trip.

Trip	*User Trip 160*
Value	160
Short description	

This trip is not used by the drive and can be used for a user trip.

Trip	*User Trip 161*
Value	161
Short description	

This trip is not used by the drive and can be used for a user trip.

Trip	*User Trip 162*
Value	162
Short description	

This trip is not used by the drive and can be used for a user trip.

Trip	*User Trip 163*
Value	163
Short description	

This trip is not used by the drive and can be used for a user trip.

Trip	*User Trip 164*
Value	164
Short description	

This trip is not used by the drive and can be used for a user trip.

Trip	*User Trip 165*
Value	165
Short description	

This trip is not used by the drive and can be used for a user trip.

Trip	*User Trip 166*
Value	166
Short description	

This trip is not used by the drive and can be used for a user trip.

Trip	*User Trip 167*
Value	167
Short description	

This trip is not used by the drive and can be used for a user trip.

Trip	*Watchdog*
Value	30
Short description	Control word watchdog timeout

This trip indicates that the control word watchdog has been enabled and has timed out.